molex
one company > a world of innovation

This document was generated on 03/26/2010

**PLEASE CHECK WWW.MOLEX.COM FOR LATEST PART INFORMATION**

**Part Number:** 0082225902

**Status:** Active

**Description:** 3.96mm (.156") Pitch Round Conductor Flat Cable - 22 AWG (7 x 30) Stranded, Topcoat, 2 Circuits, Reel 30.48m (100.0' ) Length

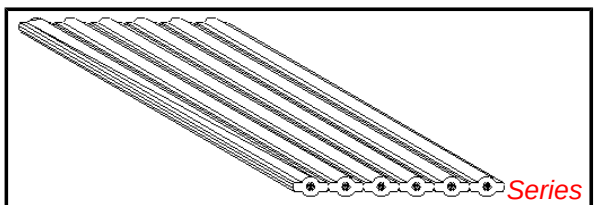

*image - Reference only*

**Documents:**
Drawing (PDF)
RoHS Certificate of Compliance (PDF)

## Agency Certification

| | |
|---|---|
| CSA | LR61126 |
| UL | E61522 |

## General

| | |
|---|---|
| Product Family | Cable |
| Series | 8868 |
| Crimp Quality Equipment | Yes |
| Geographic Area | Asia |
| Product Name | Ribbon |

## Physical

| | |
|---|---|
| Cable Length | 30.48m (100.0' ) |
| Circuits (Loaded) | 2 |
| Insulation | PVC |
| Packaging Type | Reel |
| Pitch - Term. Interface (in) | 0.156 In |
| Pitch - Term. Interface (mm) | 3.96 mm |
| Temperature Range - Operating | -20°C to +105°C |
| Wire Size AWG | 22 |
| Wire/Cable Type | (7x30) Stranded, Topcoat |

## Electrical

| | |
|---|---|
| Current - Maximum per Contact | N/A |
| Voltage - Maximum | 300V |

## Material Info

| | |
|---|---|
| Old Part Number | 8868-02-100B |

## Reference - Drawing Numbers

| | |
|---|---|
| Sales Drawing | SD-8868-001 |

**EU RoHS**
**ELV and RoHS Compliant**
**REACH SVHC**
Not Reviewed
**Halogen-Free Status**
**Not Reviewed**

**China RoHS**

**Need more information on product environmental compliance?**

Email productcompliance@molex.com
For a multiple part number RoHS Certificate of Compliance, click here

Please visit the Contact Us section for any non-product compliance questions.

**Search Parts in this Series**
8868Series

**Use With**
7674 KK® IDT Trifurcon Contact. 7675 KK® IDT Double Cantilever Contact

This document was generated on 03/26/2010

**PLEASE CHECK WWW.MOLEX.COM FOR LATEST PART INFORMATION**

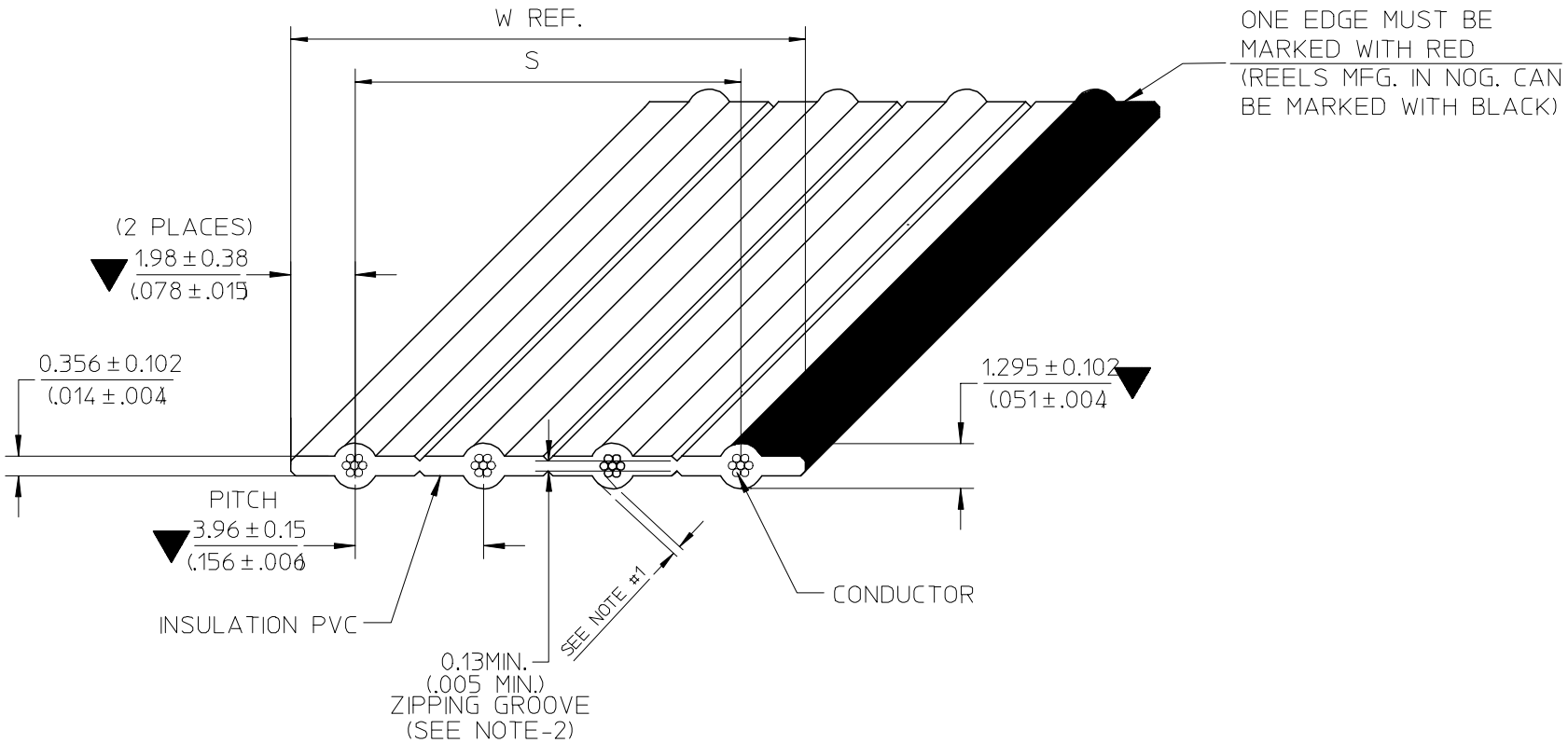


NOTE :
1. THE CABLE SHALL HAVE A MINIMUM OF 0.178mm. (.007") THICKNESS INSULATION AT ANY POINT
2. RIP TEST:
   - THE 0.13mm. (.005") ZIPPING GROOVE SHALL BE CAPABLE OF BEING RIPPED BY HAND WITHIN THE RECESS,WITHOUT EXPOSING THE ADJACENT CONDUCTORS
3. RoHS AND LEAD FREE COMPLIANT
4. SPECIAL REQUIREMENT: N/A

| REV. HISTORY | EC NO. | DETAIL | DATE |
|---|---|---|---|
| B | E-07-0748 | $B_2$: ADD NON-OPERATING TEMP.<br>$B_1$: ADD SOLDERING CONDITION | 07/09/27 |
| A | N/A | INITIAL DRAFT | 06/08/09 |

SEE CHANGE DETAIL
EC NO: THL2008-0015
DRWN:CPANSAKHOM 2007/11/28
CH'KD:DNARINTARA 2007/11/29
APPR:SVIRATJAPOL 2007/12/04
DESCRIPTION
B
REV

QUALITY SYMBOLS
▼=3
▽=0

GENERAL TOLERANCES (UNLESS SPECIFIED)

| | mm | INCH |
|---|---|---|
| 4 PLACES | ± --- | ± --- |
| 3 PLACES | ± --- | ± --- |
| 2 PLACES | ± --- | ± --- |
| 1 PLACE | ± --- | ± --- |
| ANGULAR ±---° | | |

DRAFT WHERE APPLICABLE MUST REMAIN WITHIN DIMENSIONS

DIMENSION STYLE: MM/IN
SCALE: NTS
DESIGN UNITS: INCH
THIRD ANGLE PROJECTION

DRAWN BY: CPANSAKHOM DATE: 2006/08/09
CHECKED BY: PMEECHAI DATE: 2006/08/09
APPROVED BY: SVIRATJAPOL DATE: 2006/08/09
MATERIAL NO.: SEE CHART

TITLE: FCB ROUND CONDUCTOR 3.96MM(.156)CENTERS PVC. 22AWG STRANDED TOPCOATED

molex MOLEX INCORPORATED

DOCUMENT NO.: SD-8868-001
SHEET NO.: 1 OF 3

SIZE A4

THIS DRAWING CONTAINS INFORMATION THAT IS PROPRIETARY TO MOLEX INCORPORATED AND SHOULD NOT BE USED WITHOUT WRITTEN PERMISSION

## SPECIFICATIONS

### PHYSICAL

| | |
|---|---|
| CONDUCTOR SPACING | 3.96 (.156") ℄ TO ℄ |
| WIRE GAUGE | 22 AWG(7/30) STRANDED TOPCOATED |
| INSULATION | P.V.C GRAY (LEAD FREE) |

### AGENCY

| | |
|---|---|
| U.L. STYLE NO. | 2651 |
| TEMPERATURE RATING | -20°C TO 105°C |
| VOLTAGE RATING | 300V.MAX. |
| FLAMMABILITY RATING | VW-1 |

### ELECTRICAL

| | |
|---|---|
| CONDUCTOR RESISTANCE (D.C.) | 17 m OHMS/FT. MAX. |
| CHARACTERISTIC IMPEDANCE | 140 OHMS NOM. (GS)<br>123 OHMS NOM. (GSG) |
| CAPACITANCE | 4.7 pF/FT. NOM. (GS)<br>8.5 pF/FT. NOM. (GSG) |
| PROPAGATION DELAY | 1.4 ns/FT. NOM. |
| INSULATION RESISTANCE | $10^4$M OHMS (10FT. SAMPLE) |
| DIELECTRIC WITHSTAND VOLTAGE | 2000 VRMS/MINUTE |

### GENERAL

| | |
|---|---|
| $B_2$ NON-OPERATING TEMPERATURE | -20°C TO 105°C |
| FAULTS AND/OR SPLICES | 1/REEL MAX. $100^{+3}_{-0}$FT. ($30.48^{+0.914}_{-0}$ M.)/REEL<br>20FT. (6.096M.) MIN. LENGTH |

### $B_1$ SOLDERING CONDITION

| | |
|---|---|
| SOLDER TEMPERATURE | 260°C. MAX. |
| SOLDERING TIME | 3 SECOND, MAX. |
| INSULATION SHRINK | 2MM. NOM |

SEE CHANGE DETAIL
EC NO: THL2008-0015
DRWN:CPANSAKHOM 2007/11/28
CH'KD:DNARINTARA 2007/11/29
APPR:SVIRATJAPOL 2007/12/04
DESCRIPTION
B
REV

QUALITY SYMBOLS
▼ =
C =

GENERAL TOLERANCES (UNLESS SPECIFIED)

| | mm | INCH |
|---|---|---|
| 4 PLACES | ± --- | ± --- |
| 3 PLACES | ± --- | ± --- |
| 2 PLACES | ± --- | ± --- |
| 1 PLACE | ± --- | ± --- |
| ANGULAR ±---° | | |

DRAFT WHERE APPLICABLE MUST REMAIN WITHIN DIMENSIONS

DIMENSION STYLE: MM/IN
SCALE: NTS
DESIGN UNITS: INCH
THIRD ANGLE PROJECTION

| | | |
|---|---|---|
| DRAWN BY | CPANSAKHOM | DATE 2006/08/09 |
| CHECKED BY | PMEECHAI | DATE 2006/08/09 |
| APPROVED BY | SVIRATJAPOL | DATE 2006/08/09 |

TITLE: FCB ROUND CONDUCTOR 3.96MM(.156)CENTERS PVC. 22AWG STRANDED TOPCOATED

molex MOLEX INCORPORATED

MATERIAL NO.: SEE CHART
DOCUMENT NO.: SD-8868-001
SHEET NO.: 2 OF 3
SIZE: A4

THIS DRAWING CONTAINS INFORMATION THAT IS PROPRIETARY TO MOLEX INCORPORATED AND SHOULD NOT BE USED WITHOUT WRITTEN PERMISSION

| CHART A DIMENSIONS MM. (INCHES) | | | | | SHIPPED ON 100 FT. REELS | |
|---|---|---|---|---|---|---|
| ENG. NO. | NO.OF COND. | DIMENSION S | | DIM. W (REF) | ENGINEERING NO. | ORDER NO. |
| 8868- 2 | 2 | 3.96±0.15 | (.156±.006) | 7.92 (.312) | 8868-02-100B | 82-22-5902 |
| 8868- 3 | 3 | 7.92±0.25 | (.312±.010) | 11.89 (.468) | -03- | 03 |
| 8868- 4 | 4 | 11.89±0.38 | (.468±.015) | 15.85 (.624) | -04- | 04 |
| 8868- 5 | 5 | 15.85±0.38 | (.624±.015) | 19.81 (.780) | -05- | 05 |
| 8868- 6 | 6 | 19.81±0.38 | (.780±.015) | 23.77 (.936) | -06- | 06 |
| 8868- 7 | 7 | 23.77±0.38 | (.936±.015) | 27.74 (1.092) | -07- | 07 |
| 8868- 8 | 8 | 27.74±0.38 | (1.092±.015) | 31.70 (1.248) | -08- | 08 |
| 8868- 9 | 9 | 31.70±0.38 | (1.248±.015) | 35.66 (1.404) | -09- | 09 |
| 8868-10 | 10 | 35.66±0.38 | (1.404±.015) | 39.62 (1.560) | -10- | 10 |
| 8868-11 | 11 | 39.62±0.38 | (1.560±.015) | 43.59 (1.716) | -11- | 11 |
| 8868-12 | 12 | 43.59±0.38 | (1.716±.015) | 47.55 (1.872) | -12- | 12 |
| 8868-13 | 13 | 47.55±0.38 | (1.872±.015) | 51.51 (2.028) | -13- | 13 |
| 8868-14 | 14 | 51.51±0.38 | (2.028±.015) | 55.47 (2.184) | -14- | 14 |
| 8868-15 | 15 | 55.47±0.38 | (2.184±.015) | 59.44 (2.340) | -15- | 15 |
| 8868-16 | 16 | 59.44±0.38 | (2.340±.015) | 63.40 (2.496) | -16- | 16 |

ENGINEERING NO.

8868-XX-XXXX
A B C D

A : CABLE 3.96mm. (.156") CENTERS 22 AWG STRANDED TOPCOATED
B : CONDUCTOR SIZE ( AVAILABILITY 2 THROUGH 16 )
C : CABLE LENGTH 100FT. (30.48M.)
D : A = INCHES
B = FEET

SEE CHANGE DETAIL
EC NO: THL2008-0015
DRWN:CPANSAKHOM 2007/11/28
CH'KD:DNARINTARA 2007/11/29
APPR:SVIRATJAPOL 2007/12/04
DESCRIPTION
B
REV

QUALITY SYMBOLS
▼ =
Ⓒ =

GENERAL TOLERANCES (UNLESS SPECIFIED)

| | mm | INCH |
|---|---|---|
| 4 PLACES | ± --- | ± --- |
| 3 PLACES | ± --- | ± --- |
| 2 PLACES | ± --- | ± --- |
| 1 PLACE | ± --- | ± --- |
| ANGULAR ±---° | | |

DRAFT WHERE APPLICABLE MUST REMAIN WITHIN DIMENSIONS

DIMENSION STYLE: MM/IN
SCALE: NTS
DESIGN UNITS: INCH
THIRD ANGLE PROJECTION

DRAWN BY: CPANSAKHOM DATE: 2006/08/09
CHECKED BY: PMEECHAI DATE: 2006/08/09
APPROVED BY: SVIRATJAPOL DATE: 2006/08/09
MATERIAL NO.: SEE CHART

TITLE: FCB ROUND CONDUCTOR 3.96MM(.156)CENTERS PVC. 22AWG STRANDED TOPCOATED

MOLEX INCORPORATED

DOCUMENT NO.: SD-8868-001
SHEET NO.: 3 OF 3

SIZE A4

THIS DRAWING CONTAINS INFORMATION THAT IS PROPRIETARY TO MOLEX INCORPORATED AND SHOULD NOT BE USED WITHOUT WRITTEN PERMISSION