This document was generated on 03/26/2010

PLEASE CHECK WWW.MOLEX.COM FOR LATEST PART INFORMATION

Part Number: 0082186015

Status: Active

Description: 3.96mm (.156") Pitch Round Conductor Flat Cable - 18 AWG (7 x 26) Stranded, Tinned, 15 Circuits, Reel 30.48m (100.0') Length

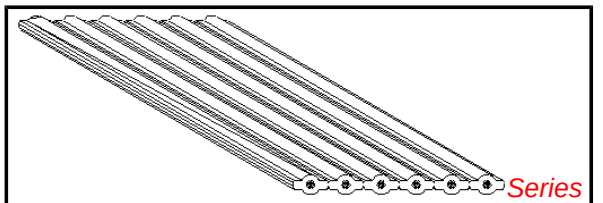

image - Reference only

Documents:

Drawing (PDF)

RoHS Certificate of Compliance (PDF)

Agency Certification

CSA	LR61126
UL	E61522

General

Product Family	Cable
Series	40174
Crimp Quality Equipment	Yes
Geographic Area	Asia
Product Name	Ribbon

Physical

Cable Length	30.48m (100.0')
Circuits (Loaded)	15
Flammability	VW-1
Insulation	PVC
Packaging Type	Reel
Pitch - Term. Interface (in)	0.156 In
Pitch - Term. Interface (mm)	3.96 mm
Temperature Range - Operating	-20°C to +105°C
Wire Size AWG	18
Wire/Cable Type	(7x26) Stranded, Tinned

Electrical

Current - Maximum per Contact	N/A
Voltage - Maximum	300V

Material Info

Old Part Number	40174-15-100B

Reference - Drawing Numbers

Sales Drawing	SD-40174-001

EU RoHS
ELV and RoHS Compliant
REACH SVHC
Not Reviewed
Halogen-Free Status
Not Reviewed

China RoHS

Need more information on product environmental compliance?

Email productcompliance@molex.com
For a multiple part number RoHS Certificate of Compliance, click here

Please visit the Contact Us section for any non-product compliance questions.

Search Parts in this Series
40174Series

Use With
7674 KK® IDT Trifurcon Contact. 7675 KK® IDT Double Cantilever Contact

This document was generated on 03/26/2010

PLEASE CHECK WWW.MOLEX.COM FOR LATEST PART INFORMATION

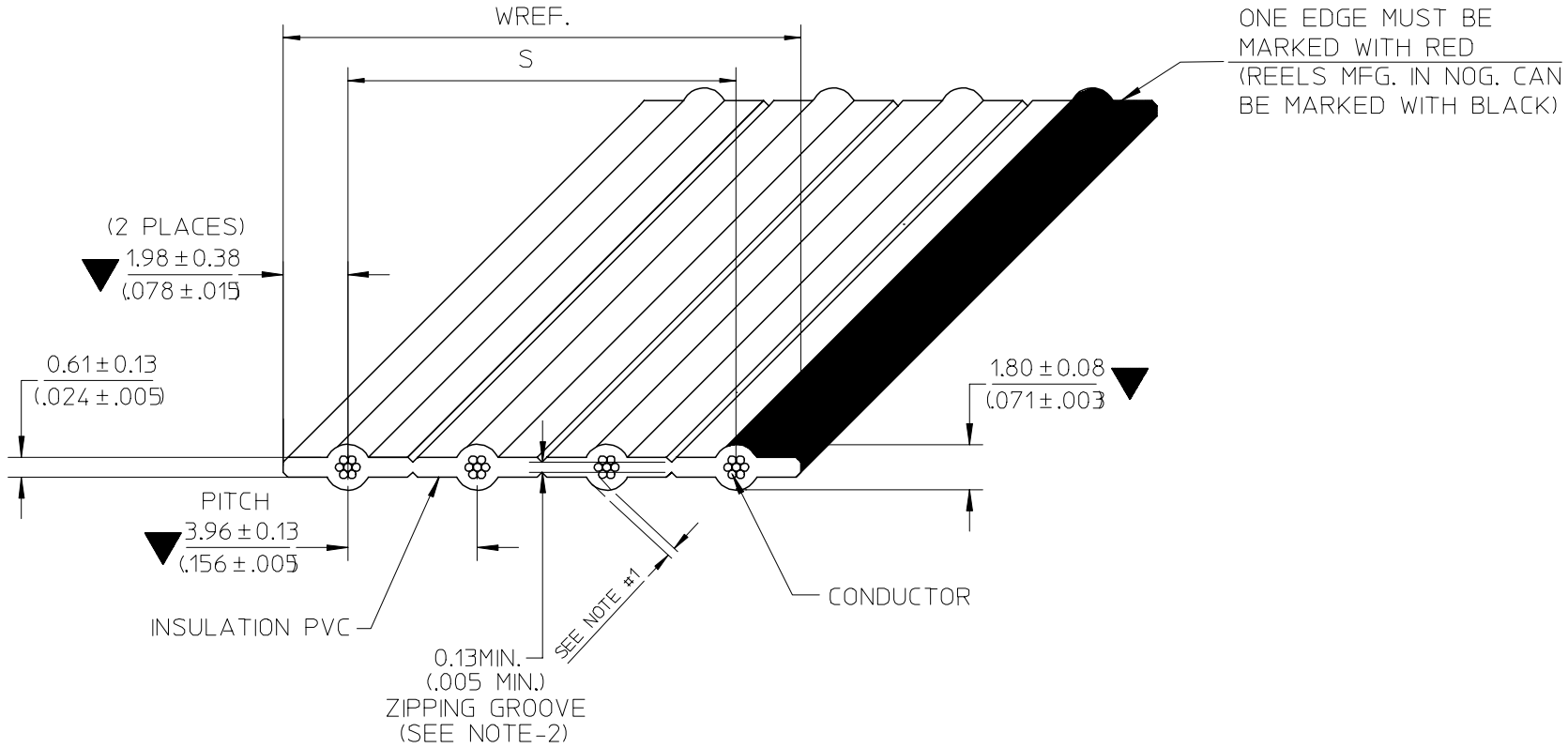

NOTE :
1. THE CABLE SHALL HAVE A MINIMUM OF 0.178mm. (.007") THICKNESS INSULATION AT ANY POINT
2. RIP TEST:
   - THE 0.13mm. (.005") ZIPPING GROOVE SHALL BE CAPABLE OF BEING RIPPED BY HAND WITHIN THE RECESS,WITHOUT EXPOSING THE ADJACENT CONDUCTORS
3. RoHS AND LEAD FREE COMPLIANT
4. SPECIAL REQUIREMENT: N/A

REV. HISTORY	EC NO.	DETAIL	DATE
B	B-07-0748	B_1 : ADD NON-OPERATING TEMP.	07/11/23
A	N/A	INITIAL DRAFT	06/08/09

SEE CHANGE DETAIL.
EC NO: THL2008-0015 2007/11/28
DRWN:CPANSAKHOM 2007/11/29
CH'KD:DNARINTARA 2007/12/04
APPR:SVIRATJAPOL 2007/12/04
DESCRIPTION
B
REV

QUALITY SYMBOLS
▼=3
▽=0

GENERAL TOLERANCES (UNLESS SPECIFIED)

	mm	INCH
4 PLACES	± ---	± ---
3 PLACES	± ---	± ---
2 PLACES	± ---	± ---
1 PLACE	± ---	± ---
ANGULAR ±---°		

DRAFT WHERE APPLICABLE MUST REMAIN WITHIN DIMENSIONS

DIMENSION STYLE: MM/IN
SCALE: NTS
DESIGN UNITS: INCH
THIRD ANGLE PROJECTION

		DATE
DRAWN BY	CPANSAKHOM	2006/08/09
CHECKED BY	PMEECHAI	2006/08/09
APPROVED BY	SVIRATJAPOL	2006/08/09

TITLE: FCB ROUND CONDUCTOR 3.96MM(.156)CENTERS PVC. 18AWG STRANDED TINNED

molex MOLEX INCORPORATED

MATERIAL NO.: SEE CHART
DOCUMENT NO.: SD-40174-001
SHEET NO.: 1 OF 3
SIZE: A4

THIS DRAWING CONTAINS INFORMATION THAT IS PROPRIETARY TO MOLEX INCORPORATED AND SHOULD NOT BE USED WITHOUT WRITTEN PERMISSION

SPECIFICATIONS

PHYSICAL

CONDUCTOR SPACING	3.96 (0.156") ℄ TO ℄
WIRE GAUGE	18 AWG(7/26) STRANDED TINNED
INSULATION	P.V.C GRAY (LEAD FREE)

AGENCY

U.L. STYLE NO.	2651
TEMPERATURE RATING	-20°C TO 105°C
VOLTAGE RATING	300V.MAX.
FLAMMABILITY RATING	VW-1

ELECTRICAL

CONDUCTOR RESISTANCE (D.C.)	7 m OHMS/FT. MAX.
CHARACTERISTIC IMPEDANCE	128 OHMS NOM. (GS) 105 OHMS NOM. (GSG)
CAPACITANCE	5.9 pF/FT. NOM. (GS) 10.9 pF/FT. NOM. (GSG)
PROPAGATION DELAY	1.4 ns/FT. NOM.
INSULATION RESISTANCE	10^4 M OHMS (10FT. SAMPLE)
DIELECTRIC WITHSTAND VOLTAGE	2000 VRMS/MINUTE

GENERAL

B1 NON-OPERATING TEMPERATURE	-20°C TO 105°C
FAULTS AND/OR SPLICES	1/REEL MAX. 100^{+3}_{-0} FT. ($30.48^{+0.914}_{-0}$ M.)/REEL 20FT. (6.096M.) MIN. LENGTH

SEE CHANGE DETAIL.
EC NO: THL2008-0015
DRWN:CPANSAKHOM 2007/11/28
CH'KD:DNARINTARA 2007/11/29
APPR:SVIRATJAPOL 2007/12/04
DESCRIPTION
B
REV

QUALITY SYMBOLS
▼ =
Ⓒ =

GENERAL TOLERANCES (UNLESS SPECIFIED)

	mm	INCH
4 PLACES	± ---	± ---
3 PLACES	± ---	± ---
2 PLACES	± ---	± ---
1 PLACE	± ---	± ---
ANGULAR ±---°		

DRAFT WHERE APPLICABLE MUST REMAIN WITHIN DIMENSIONS

DIMENSION STYLE: MM/IN
SCALE: NTS
DESIGN UNITS: INCH
THIRD ANGLE PROJECTION

DRAWN BY	CPANSAKHOM	DATE 2006/08/09
CHECKED BY	PMEECHAI	DATE 2006/08/09
APPROVED BY	SVIRATJAPOL	DATE 2006/08/09

TITLE: FCB ROUND CONDUCTOR 3.96MM(.156)CENTERS PVC. 18AWG STRANDED TINNED

molex MOLEX INCORPORATED

MATERIAL NO.: SEE CHART
DOCUMENT NO.: SD-40174-001
SHEET NO.: 2 OF 3
SIZE: A4

THIS DRAWING CONTAINS INFORMATION THAT IS PROPRIETARY TO MOLEX INCORPORATED AND SHOULD NOT BE USED WITHOUT WRITTEN PERMISSION

CHART A DIMENSIONS MM. (INCHES)					SHIPPED ON 100 FT. REELS	
ENG. NO.	NO.OF COND.	DIMENSION S		DIM. W (REF)	ENGINEERING NO.	ORDER NO.
40174- 2	2	3.96±0.13	(.156±.005)	7.92 (.312)	40174-02-100B	82-18-6002
40174- 3	3	7.92±0.25	(.312±.010)	11.89 (.468)	-03-	03
40174- 4	4	11.89±0.38	(.468±.015)	15.85 (.624)	-04-	04
40174- 5	5	15.85±0.38	(.624±.015)	19.81 (.780)	-05-	05
40174- 6	6	19.81±0.38	(.780±.015)	23.77 (.936)	-06-	06
40174- 7	7	23.77±0.38	(.936±.015)	27.74 (1.092)	-07-	07
40174- 8	8	27.74±0.38	(1.092±.015)	31.70 (1.248)	-08-	08
40174- 9	9	31.70±0.38	(1.248±.015)	35.66 (1.404)	-09-	09
40174-10	10	35.66±0.38	(1.404±.015)	39.62 (1.560)	-10-	10
40174-11	11	39.62±0.38	(1.560±.015)	43.59 (1.716)	-11-	11
40174-12	12	43.59±0.38	(1.716±.015)	47.55 (1.872)	-12-	12
40174-13	13	47.55±0.38	(1.872±.015)	51.51 (2.028)	-13-	13
40174-14	14	51.51±0.38	(2.028±.015)	55.47 (2.184)	-14-	14
40174-15	15	55.47±0.38	(2.184±.015)	59.44 (2.340)	-15-	15
40174-16	16	59.44±0.38	(2.340±.015)	63.40 (2.496)	-16-	16

ENGINEERING NO.

40174-XX-XXXX
A B C D

A : CABLE 3.96mm. (.156") CENTERS 18 AWG STRANDED TINNED
B : CONDUCTOR SIZE (AVAILABILITY 2 THROUGH 16)
C : CABLE LENGTH 100FT. (30.48M.)
D : A = INCHES
B = FEET

SEE CHANGE DETAIL
EC NO: THL2008-0015
DRWN:CPANSAKHOM 2007/11/28
CH'KD:DNARINTARA 2007/11/29
APPR:SVIRATJAPOL 2007/12/04
DESCRIPTION
B
REV

QUALITY SYMBOLS
▼ =
C =

GENERAL TOLERANCES (UNLESS SPECIFIED)

	mm	INCH
4 PLACES	± ---	± ---
3 PLACES	± ---	± ---
2 PLACES	± ---	± ---
1 PLACE	± ---	± ---
ANGULAR ±---°		

DRAFT WHERE APPLICABLE MUST REMAIN WITHIN DIMENSIONS

DIMENSION STYLE: MM/IN
SCALE: NTS
DESIGN UNITS: INCH
THIRD ANGLE PROJECTION

DRAWN BY	CPANSAKHOM	DATE 2006/08/09
CHECKED BY	PMEECHAI	DATE 2006/08/09
APPROVED BY	SVIRATJAPOL	DATE 2006/08/09

TITLE: FCB ROUND CONDUCTOR 3.96MM(.156)CENTERS PVC. 18AWG STRANDED TINNED

MOLEX INCORPORATED

MATERIAL NO.: SEE CHART
DOCUMENT NO.: SD-40174-001
SHEET NO.: 3 OF 3
SIZE: A4

THIS DRAWING CONTAINS INFORMATION THAT IS PROPRIETARY TO MOLEX INCORPORATED AND SHOULD NOT BE USED WITHOUT WRITTEN PERMISSION