This document was generated on 04/13/2010

PLEASE CHECK WWW.MOLEX.COM FOR LATEST PART INFORMATION

Part Number: 0039537648

Status: Active

Description: 2.54mm (.100") Pitch QF-50™, Right Angle, Dual Row with Eject Levers, Shrouded Header, 64 Circuits

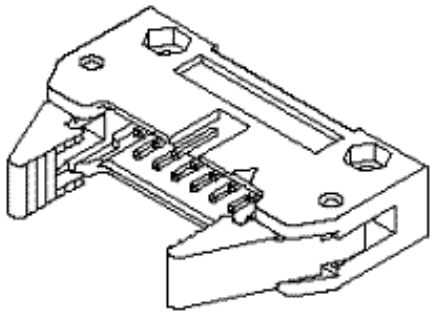

Series image - Reference only

Documents:

3D Model
Drawing (PDF)
RoHS Certificate of Compliance (PDF)

General

Product Family	Ribbon Cable / Wire Trap Connectors
Series	5340
Comments	Lever Spring Pins
Component Type	PCB Header
Glow-Wire Compliant	No
Product Name	QF-50™

Physical

Circuits (Loaded)	64
Color - Resin	Black
Entry Angle	90° Angle
Lock to Mating Part	Yes
Material - Metal	Brass
Material - Plating Mating	Gold
Material - Plating Termination	Tin
Number of Rows	2
PCB Locator	Yes
PCB Retention	None
PCB Thickness Recommended (in)	0.062 In
PCB Thickness Recommended (mm)	1.60 mm
Packaging Type	Tray
Pitch - Mating Interface (in)	0.100 In
Pitch - Mating Interface (mm)	2.54 mm
Plating min: Mating (µin)	0.030
Plating min: Mating (µm)	0.76
Plating min: Termination (µin)	0.040
Plating min: Termination (µm)	1.00
Polarized to Mating Part	No
Polarized to PCB	No
Shrouded	Yes
Stackable	No
Surface Mount Compatible (SMC)	No
Temperature Range - Operating	-40°C to +105°C
Wire Insulation Diameter	N/A
Wire Size AWG	N/A
Wire/Cable Type	Ribbon Cable

Electrical

Current - Maximum per Contact	1A
Voltage - Maximum	250V

Material Info

Old Part Number	5340-64BGS27F

EU RoHS
ELV and RoHS Compliant
REACH SVHC
Not Reviewed
Halogen-Free Status
Not Reviewed

China RoHS

Need more information on product environmental compliance?

Email productcompliance@molex.com
For a multiple part number RoHS Certificate of Compliance, click here

Please visit the Contact Us section for any non-product compliance questions.

Search Parts in this Series
5340Series

Mates With
5320

This document was generated on 04/13/2010

PLEASE CHECK WWW.MOLEX.COM FOR LATEST PART INFORMATION

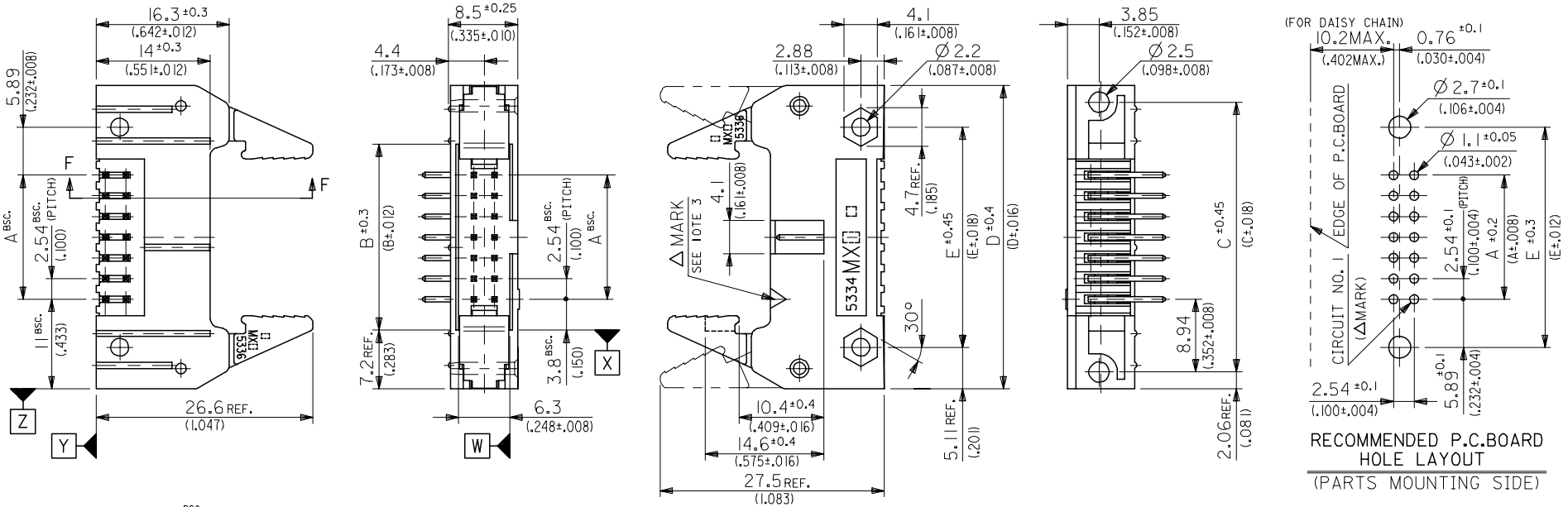

RECOMMENDED P.C.BOARD HOLE LAYOUT
(PARTS MOUNTING SIDE)

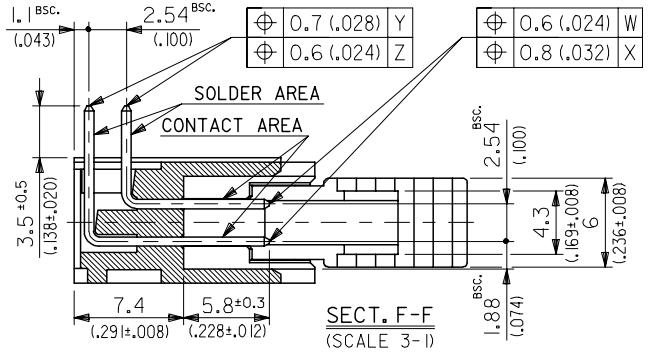

SECT. F-F
(SCALE 3-1)

NOTES
1. MATERIAL
HEADER & EJECT LEVER : G.F. 15% PBTP (UL94V-0), COLOR---BLACK
PINS : BRASS, SIZE--- □0.635(.025 SQ.)
SPRING PIN : STEEL
2. MATES WITH MOLEX CONNECTOR SERIES OF 5320.
3. LEGEND

5340 - N B *
BASE NUMBER
CIRCUIT SIZE
WITH EJECT LEVER
PLATING CODE OF PIN

	CODE:*	△MARK COLOR	CONTACT AREA	SOLDER AREA	UNDER PLATE
LEAD FREE	G2	ORANGE	GOLD 0.76 μm(.00003) MIN.		NICKEL 1μm(.00004) MIN.
LEAD FREE	G3	GREEN	GOLD 0.25 μm(.00001) MIN.		
	GS1	YELLOW	GOLD 0.1μm(.000004) MIN.	TIN-LEAD 3μm(.00012) MIN.	
	GS2	BROWN	GOLD 0.76μm(.00003) MIN.		
	GS3	BLUE	GOLD 0.25μm(.00001) MIN.		
	GS4	GOLD	GOLD 1.27μm(.00005) MIN.		
LEAD FREE	GS17F	YELLOW	GOLD 0.1 μm(.000004) MIN.	TIN 1μm(.00004) MIN.	
LEAD FREE	GS27F	BROWN	GOLD 0.76μm(.00003) MIN.		
LEAD FREE	GS37F	BLUE	GOLD 0.25μm(.00001) MIN.		
LEAD FREE	GS47F	GOLD	GOLD 1.27um(.00005) MIN.		
LEAD FREE	T2	BLACK	TIN 1 μm(.00004) MIN.		NICKEL 0.5μm(.00002) MIN.

NO. OF CKTS.	DIM. A	DIM. B	DIM. C	DIM. D	DIM. E
64	78.74 (3.100)	86.34 (3.400)	96.62 (3.804)	100.74 (3.966)	90.52 (3.564)
60	73.66 (2.900)	81.26 (3.200)	91.54 (3.604)	95.66 (3.766)	85.44 (3.364)
50	60.96 (2.400)	68.56 (2.700)	78.84 (3.104)	82.96 (3.266)	72.74 (2.864)
40	48.26 (1.900)	55.86 (2.200)	66.14 (2.604)	70.26 (2.766)	60.04 (2.364)
34	40.64 (1.600)	48.24 (1.900)	58.52 (2.304)	62.64 (2.466)	52.42 (2.064)
30	35.56 (1.400)	43.16 (1.700)	53.44 (2.104)	57.56 (2.266)	47.34 (1.864)
26	30.48 (1.200)	38.08 (1.500)	48.36 (1.904)	52.48 (2.066)	42.26 (1.664)
20	22.86 (.900)	30.46 (1.200)	40.74 (1.604)	44.86 (1.766)	34.64 (1.364)
16	17.78 (.700)	25.38 (1.000)	35.66 (1.404)	39.78 (1.566)	29.56 (1.164)
14	15.24 (.600)	22.84 (.900)	33.12 (1.304)	37.24 (1.466)	27.02 (1.064)
10	10.16 (.400)	17.76 (.700)	28.04 (1.104)	32.16 (1.266)	21.94 (.864)

REVISED
EC NO: J2006-0712 DRWN:AYANAGIMOTO 2005/10/03
CHKD:MTANAKA 2005/10/06
APPR:NUKITA 2005/10/14
DESCRIPTION
REV

GENERAL TOLERANCES (UNLESS SPECIFIED)

10 UNDER	±0.2
10 OVER 30 UNDER	±0.25
30 OVER	±0.3
ANGULAR ±3 °	

DRAFT WHERE APPLICABLE MUST REMAIN WITHIN DIMENSIONS

DIMENSION STYLE: MM/IN	SCALE: 2:1	DESIGN UNITS: METRIC	THIRD ANGLE PROJECTION

DRAWN BY: HHIRAMOT DATE: 1989/11/13
CHECKED BY: MSASAO DATE:
APPROVED BY: HIKESUGI DATE:
MATERIAL NO.: SEE SHEET 2 OF 2
DOCUMENT NO.: SD-5340-002
SHEET NO.: 1 OF 2

TITLE: QIK FLECS HEADER ASSY R/A WITH EJECT LEVER (ENGLISH ONLY)

molex MOLEX INCORPORATED

SIZE A3

THIS DRAWING CONTAINS INFORMATION THAT IS PROPRIETARY TO MOLEX INCORPORATED AND SHOULD NOT BE USED WITHOUT WRITTEN PERMISSION