This document was generated on 04/08/2010

PLEASE CHECK WWW.MOLEX.COM FOR LATEST PART INFORMATION

Part Number: 0039534600

Status: Active

Description: 2.54mm (.100") Pitch QF-50™ Receptacle, Vertical, Dual Row, Preloaded Upper Housing, 0.76µm Gold Contact Plating, 60 Circuits

Documents:

Drawing (PDF)

RoHS Certificate of Compliance (PDF)

Product Specification PS-5320-008 (PDF)

Agency Certification

CSA	LR19980
UL	E29179

General

Product Family	Ribbon Cable / Wire Trap Connectors
Series	5320
Comments	Preloaded Upper Housing
Component Type	Housing
Glow-Wire Compliant	No
Product Name	QF-50™

Physical

Circuits (Loaded)	60
Color - Resin	Black
Durability (mating cycles max)	500
Entry Angle	Vertical
Flammability	94V-0
Lock to Mating Part	Yes
Material - Metal	Phosphor Bronze
Material - Plating Mating	Gold
Material - Plating Termination	Tin
Number of Rows	2
PCB Locator	No
PCB Retention	None
Packaging Type	Tray
Pitch - Mating Interface (in)	0.050 In
Pitch - Mating Interface (mm)	1.27 mm
Pitch - Term. Interface (in)	0.100 In
Pitch - Term. Interface (mm)	2.54 mm
Plating min: Mating (µin)	0.030
Plating min: Mating (µm)	0.76
Polarized to Mating Part	Yes
Stackable	No
Temperature Range - Operating	-40°C to +105°C
Wire Insulation Diameter	1.14mm (.045") max.
Wire Size AWG	26, 28
Wire/Cable Type	Ribbon Cable

Electrical

Current - Maximum per Contact	1A
Voltage - Maximum	500V AC

Material Info

Old Part Number	5320-60BGS27F

Reference - Drawing Numbers

Product Specification	PS-5320-008

EU RoHS
ELV and RoHS Compliant
REACH SVHC
Not Reviewed
Halogen-Free Status
Not Reviewed

China RoHS

Need more information on product environmental compliance?

Email productcompliance@molex.com
For a multiple part number RoHS Certificate of Compliance, click here

Please visit the Contact Us section for any non-product compliance questions.

Search Parts in this Series
5320Series

Mates With
5330 , 5340 , 5332 , 5342 , 5576 , 5578

Use With
5328 Strain Relief

This document was generated on 04/08/2010

PLEASE CHECK WWW.MOLEX.COM FOR LATEST PART INFORMATION

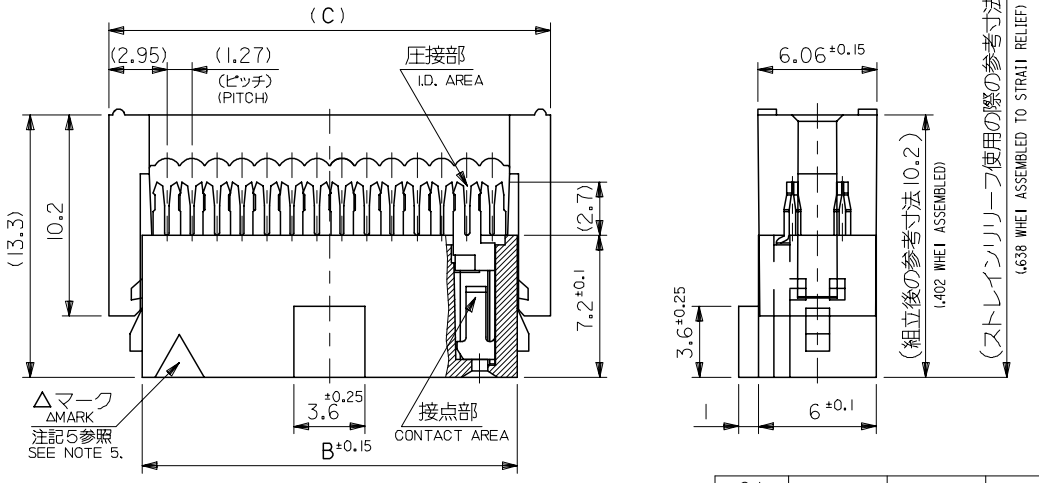

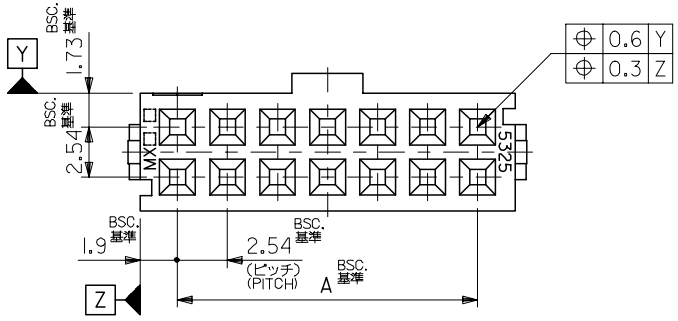

極数 NO.OF CKTS.	A 寸法 DIM.A	B 寸法 DIM.B	C 寸法 DIM.C
64	78.74	82.54	85.91
60	73.66	77.46	80.83
50	60.96	64.76	68.13
44	53.34	57.14	60.51
40	48.26	52.06	55.43
34	40.64	44.44	47.81
30	35.56	39.36	42.73
26	30.48	34.28	37.65
20	22.86	26.66	30.03
16	17.78	21.58	24.95
14	15.24	19.04	22.41
12	12.70	16.50	19.87
10	10.16	13.96	17.33

注記
NOTES

1. 材料　ハウジング ： ガラス繊維 15% 入り PBTP (UL94V-0)，黒色
   ターミナル ： リン青銅
   MATERIAL
   HOUSING : G.F. 15% PBTP (UL94V-0)
   TERMINAL : PHOSPHOR BRONZE
2. 適用電線： 1.27 ピッチリボンケーブル　被覆外径： Ø 1.14 MAX.
   より線 ： AWG#26 ～ #28 (芯線 7 本構成)
   単線 ： AWG#28
   FOR USE WITH AWG#26 & #28 STRANDED WIRE (CONSISTS OF 7 CONDUCTORS) AND #28 SOLID WIRE.
   1.14(.045) DIA. MAX. INSULATION RIBBON CABLE WITH 1.27(.050) CENTERS.
3. 適合ストレインリリーフ： 5328-N
   MATES WITH STRAIN RELIEF OF 5328 SERIES.
4. 嵌合相手 ： 5330,5332,5340,5342,5576,5578 シリーズ
   MATES WITH CONNECTOR SERIES OF 5330,5332,5340,5342,5576 & 5578.
5. 使用符号の説明 LEGEND 5320 - N B * - *
   ベースナンバー BASE NUMBER
   極数 CIRCUIT SIZE
   アッパーハウジング組付けタイプ PRELOADED UPPER HOUSING
   ターミナルのメッキコード PLATING CODE OF TERMINAL
   MATERIAL COLOR BLANK : BLACK GY : GREY

	コード:*	△マークの色	接点部メッキ	圧接部メッキ	下地メッキ
LEAD-FREE	G1	白 WHITE	金 0.1 μm MIN. GOLD	金 0.1 μm MIN. GOLD	ニッケル 1μm MIN. NICKEL
LEAD-FREE	G2	橙 ORANGE	金 0.76μm MIN. GOLD		
LEAD-FREE	G3	緑 GREEN	金 0.25μm MIN. GOLD		
	GS1	黄 YELLOW	金 0.1μm MIN. GOLD	半田 1μm MIN. TIN-LEAD	
	GS2	茶 BROWN	金 0.76μm MIN. GOLD		
	GS3	青 BLUE	金 0.25μm MIN. GOLD		
	GS4	金 GOLD	金 1.27 μm MIN. GOLD		
LEAD-FREE	GS17F	黄 YELLOW	金 0.1μm MIN. GOLD	錫 1μm MIN. TIN	
LEAD-FREE	GS27F	茶 BROWN	金 0.76μm MIN. GOLD		
LEAD-FREE	GS37F	青 BLUE	金 0.25μm MIN. GOLD		
LEAD-FREE	GS47F	金 GOLD	金 1.27 μm MIN. GOLD		
LEAD-FREE	T2	黒 BLACK	錫 0.9μm MIN. TIN リフロー処理 (前メッキ) REFLOW (PRE-PLATED)	—	—

REVISED
EC NO: J2006-0433 2005/08/09
DRWN:AYANAGIMOTO 2005/08/17
CHKD:MTANAKA
APPR:NUKITA 2005/08/24
DESCRIPTION
REV J

GENERAL TOLERANCES (UNLESS SPECIFIED)

10 UNDER	±0.2
10 OVER 30 UNDER	±0.25
30 OVER	±0.3
ANGULAR	±3 °

DRAFT WHERE APPLICABLE MUST REMAIN WITHIN DIMENSIONS

DIMENSION STYLE: MM ONLY
SCALE: 4:1
DESIGN UNITS: METRIC
THIRD ANGLE PROJECTION
DRAWN BY: H.HIRAMOTO DATE: 1990/07/11
CHECKED BY DATE
APPROVED BY DATE
TITLE: QIK FLECS FEMALE ASS'Y
molex MOLEX INCORPORATED
MATERIAL NO.: SEE SHEET 2
DOCUMENT NO.: SD-5320-003
SHEET NO.: 1 OF 2
SIZE A3

THIS DRAWING CONTAINS INFORMATION THAT IS PROPRIETARY TO MOLEX INCORPORATED AND SHOULD NOT BE USED WITHOUT WRITTEN PERMISSION

39-53 -4645	5320-64BGS37F-GY	39-53 -4644	5320-64BGS27F-GY	39-53 -4643	5320-64BGS17F-GY			39-53 -4641	5320-64BGS37F	39-53 -4640	5320-64BGS27F	39-53 -3649	5320-64BGS17F	64
-4605	-60BGS37F-GY	-4604	-60BGS27F-GY	-4603	-60BGS17F-GY			-4601	-60BGS37F	-4600	-60BGS27F	-3609	-60BGS17F	60
-4505	-50BGS37F-GY	-4504	-50BGS27F-GY	-4503	-50BGS17F-GY	39-53 -4502	5320-50BGS47F	-4501	-50BGS37F	-4500	-50BGS27F	-3509	-50BGS17F	50
								-4441	-44BGS37F					44
-4405	-40BGS37F-GY	-4404	-40BGS27F-GY	-4403	-40BGS17F-GY			-4401	-40BGS37F	-4400	-40BGS27F	-3409	-40BGS17F	40
-4345	-34BGS37F-GY	-4344	-34BGS27F-GY	-4343	-34BGS17F-GY	-4342	-34BGS47F	-4341	-34BGS37F	-4340	-34BGS27F	-3349	-34BGS17F	34
-4305	-30BGS37F-GY	-4304	-30BGS27F-GY	-4303	-30BGS17F-GY			-4301	-30BGS37F	-4300	-30BGS27F	-3309	-30BGS17F	30
-4265	-26BGS37F-GY	-4264	-26BGS27F-GY	-4263	-26BGS17F-GY	-4262	-26BGS47F	-4261	-26BGS37F	-4260	-26BGS27F	-3269	-26BGS17F	26
-4205	-20BGS37F-GY	-4204	-20BGS27F-GY	-4203	-20BGS17F-GY			-4201	-20BGS37F	-4200	-20BGS27F	-3209	-20BGS17F	20
-4165	-16BGS37F-GY	-4164	-16BGS27F-GY	-4163	-16BGS17F-GY	-4162	-16BGS47F	-4161	-16BGS37F	-4160	-16BGS27F	-3169	-16BGS17F	16
-4145	-14BGS37F-GY	-4144	-14BGS27F-GY	-4143	-14BGS17F-GY	39-53 -4142	5320-14BGS47F	-4141	-14BGS37F	-4140	-14BGS27F	-3149	-14BGS17F	14
														12
39-53 -4105	5320-10BGS37F-GY	39-53 -4104	5320-10BGS27F-GY	39-53 -4103	5320-10BGS17F-GY			39-53 -4101	5320-10BGS37F	39-53 -4100	5320-10BGS27F	39-53 -3109	5320-10BGS17F	10
EDP NO.	ENG. NO.	EDP NO.	ENG. NO.	EDP NO.	ENG. NO.	EDP NO.	ENG. NO.	EDP NO.	ENG. NO.	EDP NO.	ENG. NO.	EDP NO.	ENG. NO.	NO. OF CKTS.
5320-NBGS37F-GY -LEAD FREE-		5320-NBGS27F-GY -LEAD FREE-		5320-NBGS17F-GY -LEAD FREE-		5320-NBGS47F -LEAD FREE-		5320-NBGS37F -LEAD FREE-		5320-NBGS27F -LEAD FREE-		5320-NBGS17F -LEAD FREE-		
39-51-7644	5320-64BGS3-GY	39-51-7643	5320-64BGS2-GY	39-51-7642	5320-64BGS1-GY			39-51-2645	5320-64BGS3	39-51-2644	5320-64BGS2	39-51-2643	5320-64BGS1	64
-7604	-60BGS3-GY	-7603	-60BGS2-GY	-7602	-60BGS1-GY			-2605	-60BGS3	-2604	-60BGS2	-2603	-60BGS1	60
-7504	-50BGS3-GY	-7503	-50BGS2-GY	-7502	-50BGS1-GY	39-51-9500	5320-50BGS4	-2505	-50BGS3	-2504	-50BGS2	-2503	-50BGS1	50
								-2445	-44BGS3					44
-7404	-40BGS3-GY	-7403	-40BGS2-GY	-7402	-40BGS1-GY			-2405	-40BGS3	-2404	-40BGS2	-2403	-40BGS1	40
-7344	-34BGS3-GY	-7343	-34BGS2-GY	-7342	-34BGS1-GY	-9340	-34BGS4	-2345	-34BGS3	-2344	-34BGS2	-2343	-34BGS1	34
-7304	-30BGS3-GY	-7303	-30BGS2-GY	-7302	-30BGS1-GY			-2305	-30BGS3	-2304	-30BGS2	-2303	-30BGS1	30
-7264	-26BGS3-GY	-7263	-26BGS2-GY	-7262	-26BGS1-GY	-9260	-26BGS4	-2265	-26BGS3	-2264	-26BGS2	-2263	-26BGS1	26
-7204	-20BGS3-GY	-7203	-20BGS2-GY	-7202	-20BGS1-GY			-2205	-20BGS3	-2204	-20BGS2	-2203	-20BGS1	20
-7164	-16BGS3-GY	-7163	-16BGS2-GY	-7162	-16BGS1-GY	-9160	-16BGS4	-2165	-16BGS3	-2164	-16BGS2	-2163	-16BGS1	16
-7144	-14BGS3-GY	-7143	-14BGS2-GY	-7142	-14BGS1-GY	39-51-9140	5320-14BGS4	-2145	-14BGS3	-2144	-14BGS2	-2143	-14BGS1	14
														12
39-51-7104	5320-10BGS3-GY	39-51-7103	5320-10BGS2-GY	39-51-7102	5320-10BGS1-GY			39-51-2105	5320-10BGS3	39-51-2104	5320-10BGS2	39-51-2103	5320-10BGS1	10
EDP NO.	ENG. NO.	EDP NO.	ENG. NO.	EDP NO.	ENG. NO.	EDP NO.	ENG. NO.	EDP NO.	ENG. NO.	EDP NO.	ENG. NO.	EDP NO.	ENG. NO.	NO. OF CKTS.
5320-NBGS3-GY		5320-NBGS2-GY		5320-NBGS1-GY		5320-NBGS4		5320-NBGS3		5320-NBGS2		5320-NBGS1		
														64
								39-51-0601	5320-60BG3	15-29-3604	5320-60BG2	15-29-3603	5320-60BG1	60
						39-52-1505	5320-50BT2	-0501	-50BG3	-3504	-50BG2	-3503	-50BG1	50
														44
						-1405	-40BT2	-0401	-40BG3	-3404	-40BG2	-3403	-40BG1	40
						-1345	-34BT2	-0341	-34BG3	-3344	-34BG2	-3343	-34BG1	34
						-1305	-30BT2					-3303	-30BG1	30
						-1265	-26BT2	-0261	-26BG3	-3264	-26BG2	-3263	-26BG1	26
						-1205	-20BT2	-0201	-20BG3	-3204	-20BG2	-3203	-20BG1	20
						-1165	-16BT2	-0161	-16BG3	-3164	-16BG2	-3163	-16BG1	16
						-1145	-14BT2	-0141	-14BG3	-3144	-14BG2	-3143	-14BG1	14
						-1125	-12BT2							12
						39-52-1105	5320-10BT2	39-51-0101	5320-10BG3	15-29-3104	5320-10BG2	15-29-3103	5320-10BG1	10
						EDP NO.	ENG. NO.	EDP NO.	ENG. NO.	EDP NO.	ENG. NO.	EDP NO.	ENG. NO.	NO. OF CKTS.
						5320-NBT2 -LEAD FREE-		5320-NBG3 -LEAD FREE-		5320-NBG2 -LEAD FREE-		5320-NBG1 -LEAD FREE-		

REVISED
EC NO: J2006-0433 2005/08/09
DRWN:AYANAGIMOTO 2005/08/17
CHKD:MTANAKA
APPR:NUKITA 2005/08/24

REV J

DESCRIPTION

GENERAL TOLERANCES (UNLESS SPECIFIED)

10 UNDER	±0.2
10 OVER 30 UNDER	±0.25
30 OVER	±0.3
ANGULAR ±3 °	

DRAFT WHERE APPLICABLE MUST REMAIN WITHIN DIMENSIONS

DIMENSION STYLE: MM ONLY
SCALE: 4:1
DESIGN UNITS: METRIC
THIRD ANGLE PROJECTION

DRAWN BY: H.HIRAMOTO DATE: 1990/07/11
CHECKED BY: DATE:
APPROVED BY: DATE:

TITLE: QIK FLECS FEMALE ASS'Y

molex MOLEX INCORPORATED

MATERIAL NO.: SEE CHART
DOCUMENT NO.: SD-5320-003
SHEET NO.: 2 OF 2

SIZE A3

THIS DRAWING CONTAINS INFORMATION THAT IS PROPRIETARY TO MOLEX INCORPORATED AND SHOULD NOT BE USED WITHOUT WRITTEN PERMISSION