This document was generated on 06/04/2010

PLEASE CHECK WWW.MOLEX.COM FOR LATEST PART INFORMATION

Part Number: 0039532044
Status: Active
Overview:
Description: 1.25mm (.049") Pitch FFC/FPC Connector, Through-Hole, Right Angle, ZIF, Top Contact Style, 4 Circuits, Lead-free

Agency Certification

UL	E29179

General

Product Family	FFC/FPC Connectors
Series	5597
Overview	ffc_fpc_throughhole
Product Name	N/A

Physical

Circuits (Loaded)	4
Color - Resin	Natural
Contact Position	Top
Durability (mating cycles max)	30
Entry Angle	90° Angle
Flammability	94V-0
Mated Height (in)	0.197 In
Mated Height (mm)	5.00 mm
Material - Metal	Phosphor Bronze
Material - Plating Mating	Tin-Bismuth
Material - Plating Termination	Tin-Bismuth
Material - Resin	Polyester
Number of Rows	1
Orientation	Right Angle
PC Tail Length (in)	0.138 In
PC Tail Length (mm)	3.50 mm
PCB Locator	No
PCB Retention	None
Packaging Type	Tray
Pitch - Mating Interface (in)	0.049 In
Pitch - Mating Interface (mm)	1.25 mm
Plating min: Mating (µin)	40
Plating min: Mating (µm)	1
Plating min: Termination (µin)	40
Plating min: Termination (µm)	1
Polarized to PCB	No
Stackable	No
Surface Mount Compatible (SMC)	No
Temperature Range - Operating	-20°C to +80°C
Termination Interface: Style	Through Hole
Wire/Cable Type	FFC/FPC

Electrical

Current - Maximum per Contact	1A
Voltage - Maximum	200V

Material Info

Old Part Number	5597-04APB7F

Reference - Drawing Numbers

Packaging Specification	SPK-5597-003

EU RoHS
ELV and RoHS Compliant
REACH SVHC
Not Reviewed
Halogen-Free Status
Not Reviewed

China RoHS

Need more information on product environmental compliance?

Email productcompliance@molex.com
For a multiple part number RoHS Certificate of Compliance, click here

Please visit the Contact Us section for any non-product compliance questions.

Search Parts in this Series
5597Series

Product Specification	PS-5597-004, RPS-5597-005, RPS-5597-006, RPS-5597-013, RPS-5597-014, RPS-5597-015
Sales Drawing	SD-5597-011

This document was generated on 06/04/2010

PLEASE CHECK WWW.MOLEX.COM FOR LATEST PART INFORMATION

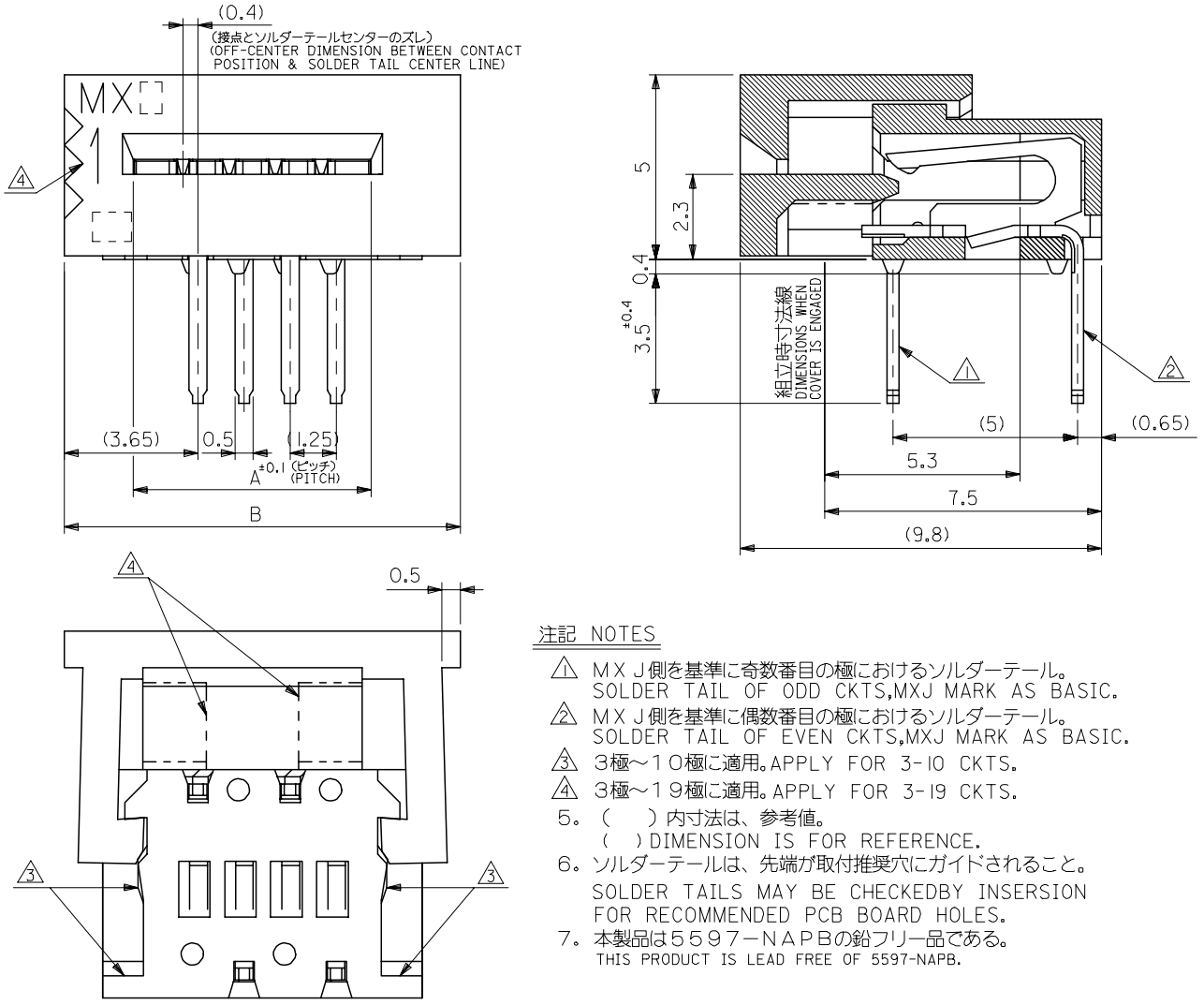

注記 NOTES

1. MXJ側を基準に奇数番目の極におけるソルダーテール。
   SOLDER TAIL OF ODD CKTS,MXJ MARK AS BASIC.
2. MXJ側を基準に偶数番目の極におけるソルダーテール。
   SOLDER TAIL OF EVEN CKTS,MXJ MARK AS BASIC.
3. 3極～10極に適用。APPLY FOR 3-10 CKTS.
4. 3極～19極に適用。APPLY FOR 3-19 CKTS.
5. (　) 内寸法は、参考値。
   (　) DIMENSION IS FOR REFERENCE.
6. ソルダーテールは、先端が取付推奨穴にガイドされること。
   SOLDER TAILS MAY BE CHECKEDBY INSERSION FOR RECOMMENDED PCB BOARD HOLES.
7. 本製品は5597-NAPBの鉛フリー品である。
   THIS PRODUCT IS LEAD FREE OF 5597-NAPB.

B	A	EDP NO.	ENG NO.	極数 CKT.
48.25	43.95	39-53-2344	5597-34APB7F	34
47.00	42.70	-2334	-33APB7F	33
45.75	41.45	-2324	-32APB7F	32
44.50	40.20	-2314	-31APB7F	31
43.25	38.95	-2304	-30APB7F	30
42.00	37.70	-2294	-29APB7F	29
40.75	36.45	-2284	-28APB7F	28
39.50	35.20	-2274	-27APB7F	27
38.25	33.95	-2264	-26APB7F	26
37.00	32.70	-2254	-25APB7F	25
35.75	31.45	-2244	-24APB7F	24
34.50	30.20	-2234	-23APB7F	23
33.25	28.95	-2224	-22APB7F	22
32.00	27.70	-2214	-21APB7F	21
30.75	26.45	-2204	-20APB7F	20
29.50	25.20	-2194	-19APB7F	19
28.25	23.95	-2184	-18APB7F	18
27.00	22.70	-2174	-17APB7F	17
25.75	21.45	-2164	-16APB7F	16
24.50	20.20	-2154	-15APB7F	15
23.25	18.95	-2144	-14APB7F	14
22.00	17.70	-2134	-13APB7F	13
20.75	16.45	-2124	-12APB7F	12
19.50	15.20	-2114	-11APB7F	11
18.25	13.95	-2104	-10APB7F	10
17.00	12.70	-2094	-09APB7F	9
15.75	11.45	-2084	-08APB7F	8
14.50	10.20	-2074	-07APB7F	7
13.25	8.95	-2064	-06APB7F	6
12.00	7.70	-2054	-05APB7F	5
10.75	6.45	-2044	-04APB7F	4
9.50	5.20	39-53-2034	5597-03APB7F	3

MODEL NO. 5597-NAPB7F

材料
MATERIAL
HOUSING, ACTUATOR : PBTP, UL94V-0
TERMINAL : PHOSPHOR-BRONZE
THK : 0.3t

仕上げ TIN-BISMUTH :
FINISH 1.0 MICROMETER MINIMUM
OVER NICKEL PLATING :
1.0 MICROMETER MINIMUM

適用電線範囲
WIRE RANGE —#—

被覆外径
INS. RANGE —#—

REVISED
EC NO: J2007-2876 2007/04/19
DRWN:KSAITO01 2007/04/19
CHKD:THARUYAMA 2007/04/20
APPR:NUKITA
DESCRIPTION
B
REV

GENERAL TOLERANCES (UNLESS SPECIFIED)

10 UNDER	±0.2
10 OVER 30 UNDER	±0.25
30 OVER	±0.3
ANGULAR ±3 °	

DRAFT WHERE APPLICABLE MUST REMAIN WITHIN DIMENSIONS

DIMENSION STYLE: MM ONLY
SCALE: ---
DESIGN UNITS: METRIC
THIRD ANGLE PROJECTION

DRAWN BY: M.NAGATA DATE: '04/05/10
CHECKED BY: K.TOJO DATE: '04/05/10
APPROVED BY: M.SASAO DATE: '04/05/10

TITLE
1.25 FPC CONNECTOR
ASSY ZIF
-LEAD FREE-

MOLEX INCORPORATED

MATERIAL NO.: SEE CHART
DOCUMENT NO.: SD-5597-011
SHEET NO.: 1 OF 2

SIZE A3

THIS DRAWING CONTAINS INFORMATION THAT IS PROPRIETARY TO MOLEX INCORPORATED AND SHOULD NOT BE USED WITHOUT WRITTEN PERMISSION

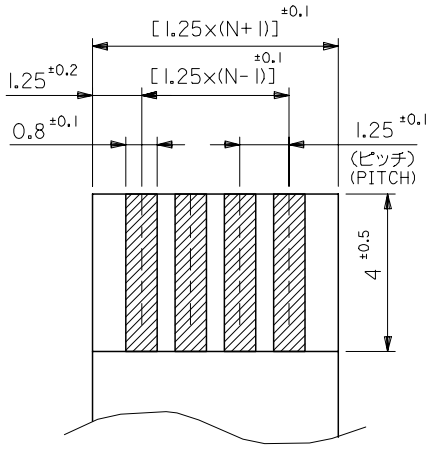

適合ＦＰＣ／ＦＦＣ推奨寸法
RECOMMENDED FPC/FFC

厚さ THK ：0.3 ±0.05

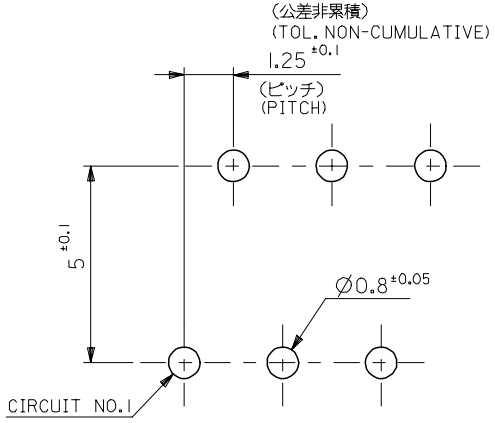

基板取付穴推奨寸法(t=1.6)
RECOMMENDED P.C. BOARD
HOLE DIMENSION

ＦＰＣ／ＦＦＣについて：

打抜き方向は導体側から補強板側を推奨いたします。

導体部については軟銅箔３５マイクロメーターまたは５０マイクロメーターを推奨いたします。

ABOUT FPC/FFC

RECOMMENDED PUNCHER DIRECTION : FROM CONDUCTOR SIDE TO STIFFENER FILM SIDE.

RECOMMENDED CONDUCTOR SPEC :

THICKNESS OF SOFT COPPER FOIL : 35 MICROMETER OR 50 MICROMETER.

ＦＰＣについて：

補強フィルム材質はポリイミドを推奨します。

接着剤は熱硬化接着剤を推奨します。

ABOUT FPC

RECOMMENDED MATERIAL :

STIFFENER FILM : POLYIMIDE

BONDING AGENT : THERMOSETTING BONDING AGENT

REVISED	EC NO: J2007-2876	DRWN:KSAITO01	CHKD:THARUYAMA	APPR:NUKITA	DESCRIPTION	REV
		2007/04/19	2007/04/19	2007/04/20		B

GENERAL TOLERANCES (UNLESS SPECIFIED)

10 UNDER	±0.2
10 OVER 30 UNDER	±0.25
30 OVER	±0.3
ANGULAR ±3 °	

DRAFT WHERE APPLICABLE MUST REMAIN WITHIN DIMENSIONS

DIMENSION STYLE	MM ONLY
SCALE	---
DESIGN UNITS	METRIC
	THIRD ANGLE PROJECTION
DRAWN BY / DATE	M.NAGATA '04/05/10
CHECKED BY / DATE	K.TOJO '04/05/10
APPROVED BY / DATE	M.SASAO '04/05/10
MATERIAL NO.	SEE CHART
MODEL NO.	5597-NAPB7F
TITLE	1.25 FPC CONNECTOR ASSY ZIF -LEAD FREE-
	MOLEX INCORPORATED
DOCUMENT NO.	SD-5597-011
SHEET NO.	2 OF 2
SIZE	A3

THIS DRAWING CONTAINS INFORMATION THAT IS PROPRIETARY TO MOLEX INCORPORATED AND SHOULD NOT BE USED WITHOUT WRITTEN PERMISSION