molex
one company > a world of innovation

This document was generated on 05/19/2010

PLEASE CHECK WWW.MOLEX.COM FOR LATEST PART INFORMATION

Part Number: 0039000330
Status: Active
Overview: standard_062
Description: 1.57mm (.062") Diameter, Standard .062" Pin and Socket Crimp Terminal, Series 1560, Male, with Gold (Au) over Nickel Plated Brass Contact, 18-24 AWG, Bag

Documents:
Drawing (PDF)
RoHS Certificate of Compliance (PDF)
Product Specification PS-1625-010 (PDF)

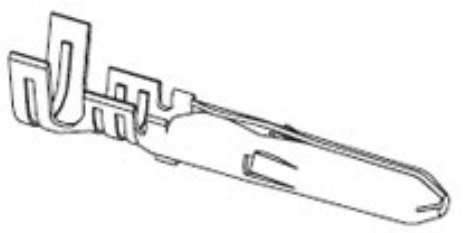

Series image - Reference only

General

Product Family	Crimp Terminals
Series	1560
Crimp Quality Equipment	Yes
Overview	standard_062
Product Name	Standard .062"

Physical

Gender	Male
Material - Metal	Brass
Material - Plating Mating	Gold
Material - Plating Termination	Gold
Packaging Type	Bag
Plating min: Mating (µin)	14
Plating min: Mating (µm)	0.35
Plating min: Termination (µin)	14
Plating min: Termination (µm)	0.35
Termination Interface: Style	Crimp or Compression
Wire Insulation Diameter	1.50-3.10mm (.059-.122")
Wire Size AWG	18, 20, 22, 24
Wire Size mm²	N/A

Electrical

Current - Maximum per Contact	5A
Voltage - Maximum	250V

Material Info

Old Part Number	1560GL

Reference - Drawing Numbers

Product Specification	PS-1625-010, RPS-1625-001

EU RoHS
ELV and RoHS Compliant
REACH SVHC
Contains SVHC: No
Halogen-Free Status
Not Reviewed

China RoHS

Need more information on product environmental compliance?

Email productcompliance@molex.com
For a multiple part number RoHS Certificate of Compliance, click here

Please visit the Contact Us section for any non-product compliance questions.

Search Parts in this Series
1560Series

Use With
1625 housing

Application Tooling | **FAQ**

Tooling specifications and manuals are found by selecting the products below. Crimp Height Specifications are then contained in the Application Tooling Specification document.

Global

Description	Product #
Hand Crimp Tool for Standard .062" Pin and Socket Crimp Terminals, 18-24 AWG	0638191300
Manual Extraction Tool	0011030002

Japan

Description	Product #
Hand Insertion Tool	0011020001

This document was generated on 05/19/2010

PLEASE CHECK WWW.MOLEX.COM FOR LATEST PART INFORMATION

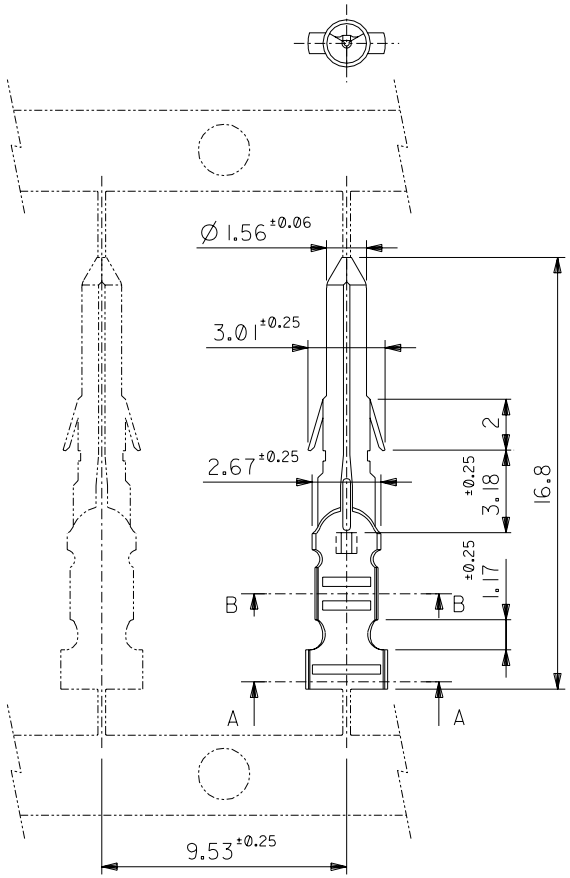

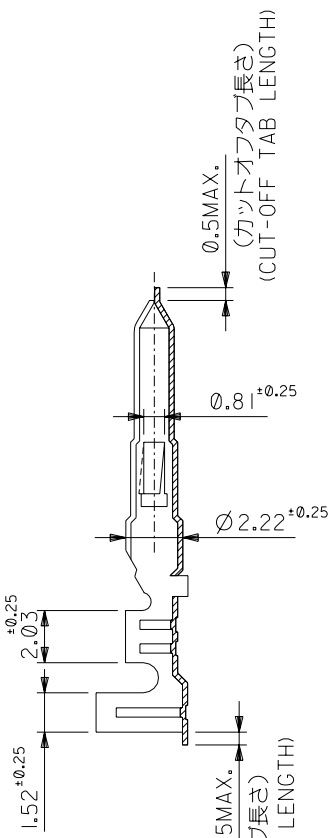

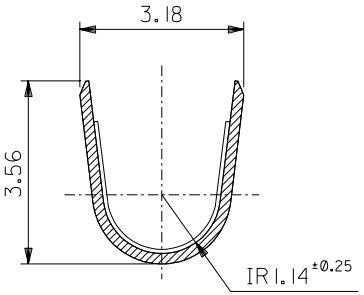

SECT. A-A
(SCALE 10 : 1)

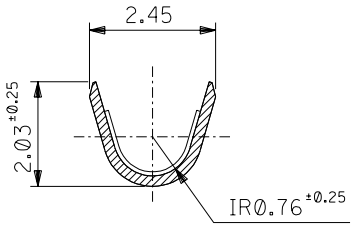

SECT. B-B
(SCALE 10 : 1)

ニッケル (2 μm MIN.) 下地 金(0.35 μm MIN.) GOLD(0.35 μm MIN.) OVER NICKEL(2 μm MIN.)	39-00-0330	1560GL	バラ端子 LOOSE
	39-00-0329	1560G	連鎖状端子 CHAIN
銅(0.5 μm MIN.)下地 錫(0.9 μm MIN.) TIN(0.9 μm MIN.) OVER COPPER(0.5 μm MIN.)	39-00-0327	1560TL	バラ端子 LOOSE
	39-00-0278	1560T	連鎖状端子 CHAIN
メッキ PLATING	EDP.NO.	ENG.NO.	形状 FORM

注記 NOTES:

1. 一般公差 : ±0.4
   GENERAL TOLERANCES: ±0.4

角度 ANGLE	±3°
30 以上 OVER	±0.3
10 以上 OVER 30 未満 UNDER	±0.25
10 未満 UNDER	±0.2
一般公差 GENERAL TOLERANCES	

記号 LTR	変更内容 REVISION RECORD	DR. CHK.	日付 DATE
K	REDRAWN (J30695) 再作図	h.h H.H	'93/07/09

材料 MATERIAL	黄銅 BRASS 0.2 t
仕上げ FINISH	〃
適用電線範囲 WIRE RANGE	AWG#18-#24
被覆外径 INS. RANGE	Ø1.5～3.1
DRAWN BY '93/07/09	H.HASEGAWA
CHK'D BY '93/07/09	H.HIRAMOTO
APP'D BY '93/07/09	M.FUKUSHIMA
尺度 SCALE	5 : 1

molex MOLEX-JAPAN CO.,LTD. 日本モレックス株式会社

REVISE ONLY ON CAD SYSTEM

TITLE 名称
.062 DIA.
CRIMP MALE TERMINAL

DWG. NO. SD-1560*

REV K

1560.S01

:MM DIMENSIONS IN METRIC DO NOT SCALE DRAWING

THIS DRAWING CONTAINS INFORMATION THAT IS PROPRIETARY TO MOLEX(JAPAN) AND SHOULD NOT BE USED WITHOUT WRITTEN PERMISSION
本図面は日本モレックス（株）の所有する情報を含むもので当社の許可なく複製を禁止する。