REVISIONS			
LTR	DESCRIPTION	DATE	APPROVED
H1	REVISED PER ECO-11-005139	29MAR11	HMR

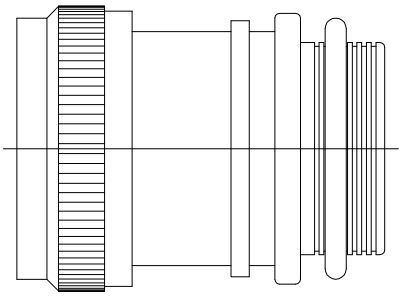

CODE 54
STRAIGHT ADAPTER

NOTES:

1. THIS PRODUCT IS DESIGNED TO TERMINATE A BRAIDED CABLE SHIELD AND A HEAT SHRINKABLE LIPPED BOOT TO A CONNECTOR.
2. SEE CH00-0250-008 FOR ORDERING INFORMATION, MODIFICATIONS AND ADDITIONAL DIMENSIONS.
3. SEE DRAWING "TR" FOR DETAIL ON TINEL-LOCK RING. RINGS ARE DESIGNED TO BE HEATED ELECTRICALLY. ALL RINGS ARE MARKED WITH THERMOCHROMIC PAINT WHICH CHANGES COLOR WHEN INSTALLATION TEMPERATURE IS REACHED.
4. ADAPTER TO BE PERMANENTLY MARKED WITH CODE IDENT. NO. AND PART NO. LESS RING DESIGNATOR (E.G.: 06090-TXR54AB00-1206). RINGS SHALL BEAR NO MARKING.
5. FOR LARGER ENTRY SIZES, A 2 PIECE ADAPTER (TYPE II) IS SUPPLIED.
6. ADAPTER MATES TO MIL-C-81703, SERIES III, MS3424, MS3446, MS3464, MS3467, MS3468, CLASS E & L.
7. ADAPTER MATES TO MIL-C-5015G, MS3400 SERIES, CLASS D, E, K, L, U & W: MS3400, MS3401, MS3404, MS3406, MS3450, MS3451, MS3454, MS3456, MS3470, MS3471, MS3472, MS3474, MS3475, MS3476. MIL-C-83723, SERIES II, CLASS A & L. MIL-C-83723, SERIES I & III, CLASS A, G, K, R & S: M83723/1, /2, /3, /4, /5, /6, /7, /8, /13, /14, /36, /37, /38, /39, /40, /41, /42, /43, /48, /49, /65, /66, /67, /68, /69, /70, /71, /72, /73, /74, /75, /76, /77, /78, /82, /83, /84, /85, /86, /87, /91, /92, /95, /97, /98, (MS3155 CONTROLLED INTERFACE).
8. THESE DIMENSIONS APPLY IF A SELF-LOCKING COUPLING NUT IS USED. (MOD. CODE "S")

IF THIS DOCUMENT IS PRINTED IT BECOMES UNCONTROLLED.
CHECK FOR THE LATEST REVISION.

SPECIFICATION CONTROL DRAWING

UNLESS OTHERWISE SPECIFIED DIMENSIONS ARE IN INCHES. METRIC DIMENSIONS ARE IN BRACKETS.

DECIMALS
.XXX ± —— [mm]
.XX ± —— [mm]
.X ± —— [mm]

ANGLES
.X ± ——

DRAWN R. RAMIREZ	DATE 03-18-93	
CHECKED	DATE	
APPROVED	DATE	
APPROVED	DATE	
CAD NAME TXR54		

THIRD ANGLE PROJECTION

TE Connectivity
300 Constitution Drive
Menlo Park, CA. 94025 U.S.A.

Raychem

TITLE
TINEL-LOCK™ ADAPTER

SIZE	CODE IDENT. NO.	DWG. NO.
A	06090	TXR54

DO NOT SCALE THIS DWG

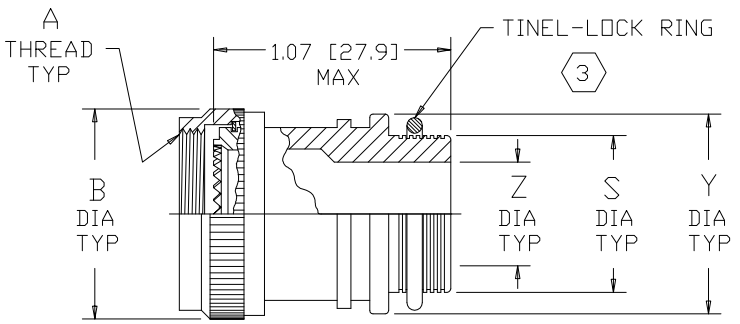

STRAIGHT ADAPTER-TYPE I

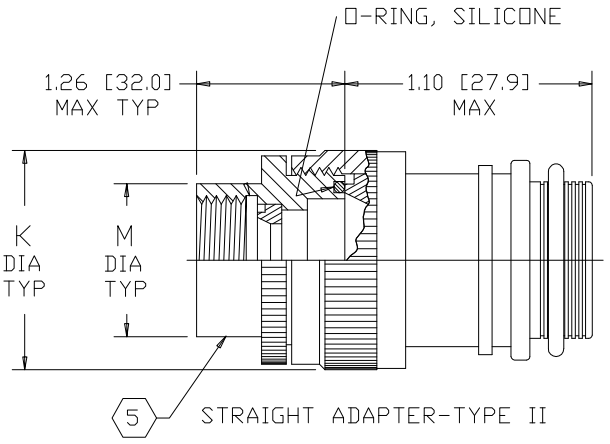

STRAIGHT ADAPTER-TYPE II

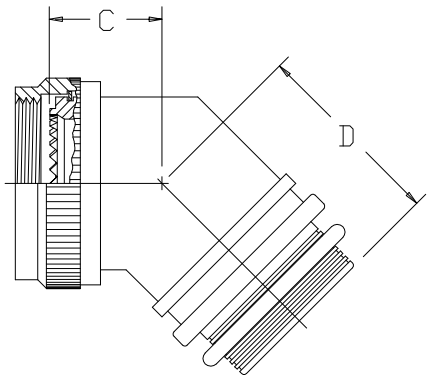

45° ADAPTER-TYPE I

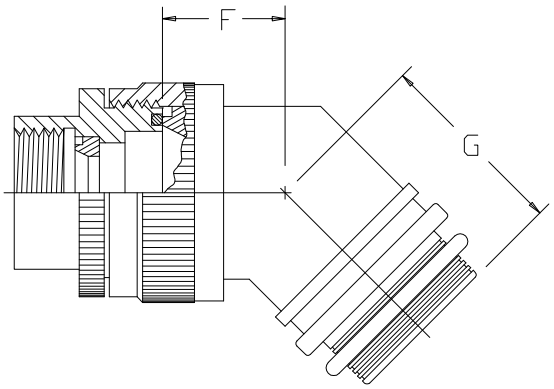

45° ADAPTER-TYPE II

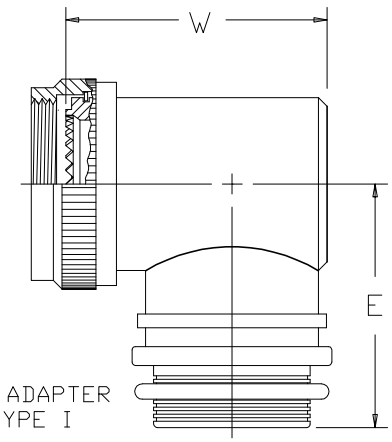

90° ADAPTER
TYPE I

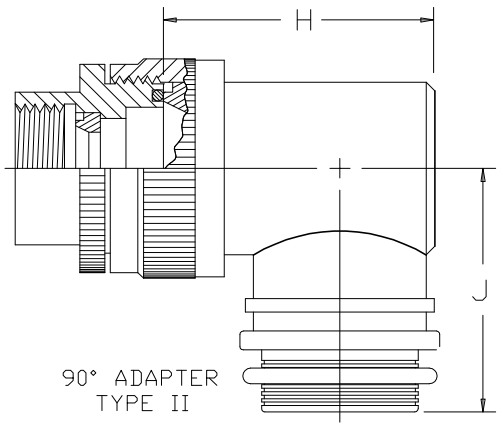

90° ADAPTER
TYPE II

IF THIS DOCUMENT IS PRINTED IT BECOMES UNCONTROLLED.
CHECK FOR THE LATEST REVISION.

SIZE	CODE IDENT. NO.	DWG. NO.	REV
A	06090	TXR54	H1
DO NOT SCALE THIS DWG	CAD NAME TXR54-2	SHEET 2 OF 3	

TABLE I

ORDER NO.	SHELL SIZE (6)	SHELL SIZE (7)	MAX ENTRY SIZE TYPE I (5)	A THREAD CLASS 2B	B DIA MAX	B DIA MAX (8)	C MAX	D MAX	E MAX	M DIA MAX
03	3		04	.562-24 UNEF	.669 [16.99]	.940 [23.88]	.75 [19.1]	.91 [23.1]	1.13 [28.7]	.695 [17.65]
08		8 & 8S	04	.500-20 UNF	.617 [15.67]	.890 [22.61]	.75 [19.1]	.91 [23.1]	1.10 [27.9]	.630 [16.00]
10		10, 10S & 10SL	06	.625-24 UNEF	.734 [18.64]	1.010 [25.65]	.77 [19.6]	.93 [23.6]	1.16 [29.5]	.757 [19.23]
12	7	12 & 12S	08	.750-20 UNEF	.858 [21.79]	1.140 [28.96]	.80 [20.3]	.95 [24.1]	1.22 [31.0]	.882 [22.40]
14	12	14 & 14S	08	.875-20 UNEF	.984 [24.99]	1.260 [32.00]	.82 [20.8]	.97 [24.6]	1.28 [32.5]	1.007 [25.58]
16	19	16 & 16S	10	1.000-20 UNEF	1.112 [28.24]	1.390 [35.31]	.84 [21.3]	1.00 [25.4]	1.35 [34.3]	1.132 [28.75]
18	27	18	12	1.062-18 UNEF	1.218 [30.94]	1.510 [38.35]	.86 [21.8]	1.01 [25.7]	1.40 [35.6]	1.218 [30.94]
20	37	20	14	1.188-18 UNEF	1.345 [34.16]	1.640 [41.66]	.88 [22.4]	1.04 [26.4]	1.46 [37.1]	1.345 [34.16]
22		22	16	1.312-18 UNEF	1.468 [37.29]	1.760 [44.70]	.91 [23.1]	1.06 [26.9]	1.53 [38.9]	1.468 [37.29]
24		24	18	1.438-18 UNEF	1.593 [40.46]	1.890 [48.00]	.93 [23.6]	1.09 [27.7]	1.59 [40.4]	1.593 [40.46]
28		28	22	1.750-18 UNS	1.969 [50.01]	2.140 [54.36]	.98 [24.9]	1.13 [28.7]	1.78 [45.2]	1.969 [50.01]
32		32	24	2.000-18 UNS	2.219 [56.36]	2.400 [60.96]	1.03 [26.2]	1.19 [30.2]	1.90 [48.3]	2.219 [56.36]
36		36	24	2.250-16 UN	2.469 [62.71]	2.640 [67.06]	1.08 [27.4]	1.23 [31.2]	2.03 [51.6]	2.469 [62.71]
40		40	24	2.500-16 UN	2.719 [69.06]	2.890 [73.41]	1.12 [28.4]	1.28 [32.5]	2.15 [54.6]	2.719 [69.06]
44		44	24	2.750-16 UN	2.969 [75.41]	3.140 [79.76]	1.17 [29.7]	1.33 [33.8]	2.28 [57.9]	2.969 [75.41]
48		48	24	3.000-16 UN	3.219 [81.76]	3.390 [86.11]	1.22 [31.0]	1.38 [35.1]	2.40 [61.0]	3.219 [81.76]
61	61		18	1.500-18 UNEF	1.653 [41.99]	1.880 [47.75]	.94 [23.9]	1.09 [27.7]	1.62 [41.1]	1.653 [41.99]

TABLE II

ENTRY SIZE	Z +.010 −.020	S DIA	Y ±.015 [±0.38]	W MAX	F MAX	G MAX	H MAX	J MAX	K MAX
04	.250 [6.35]	.376 [9.56] .370 [9.39]	.550 [13.97]	1.12 [28.4]	N/A	N/A	N/A	N/A	N/A
05	.312 [7.92]	.438 [11.13] .432 [10.97]	.612 [15.54]	1.19 [30.2]	.77 [19.6]	.93 [23.6]	1.19 [30.2]	1.16 [29.5]	.80 [20.3]
06	.375 [9.53]	.501 [12.73] .495 [12.57]	.675 [17.14]	1.25 [31.8]	.77 [19.6]	.93 [23.6]	1.19 [30.2]	1.16 [29.5]	.80 [20.3]
07	.437 [11.09]	.563 [14.31] .556 [14.12]	.737 [18.71]	1.31 [33.3]	.80 [20.3]	.95 [24.1]	1.38 [35.1]	1.22 [31.0]	.92 [23.4]
08	.500 [12.70]	.626 [15.91] .619 [15.72]	.800 [20.32]	1.38 [35.1]	.80 [20.3]	.95 [24.1]	1.38 [35.1]	1.22 [31.0]	.92 [23.4]
10	.625 [15.87]	.752 [19.11] .742 [18.84]	.925 [23.49]	1.50 [38.1]	.84 [21.3]	1.00 [25.4]	1.51 [38.4]	1.35 [34.3]	1.18 [30.0]
12	.750 [19.05]	.877 [22.28] .867 [22.02]	1.050 [26.67]	1.62 [41.1]	.86 [21.8]	1.01 [25.7]	1.63 [41.4]	1.40 [35.6]	1.35 [34.3]
14	.875 [22.23]	1.002 [25.46] .991 [25.17]	1.175 [29.84]	1.75 [44.5]	.88 [22.4]	1.04 [26.4]	1.78 [45.2]	1.46 [37.1]	1.41 [35.8]
16	1.000 [25.40]	1.127 [28.63] 1.116 [28.34]	1.300 [33.02]	1.88 [47.8]	.91 [23.1]	1.06 [26.9]	1.88 [47.8]	1.53 [38.9]	1.60 [40.6]
18	1.125 [28.57]	1.252 [31.81] 1.241 [31.52]	1.425 [36.19]	2.00 [50.8]	.93 [23.6]	1.09 [27.7]	2.01 [51.1]	1.59 [40.4]	1.66 [42.2]
20	1.250 [31.75]	1.377 [34.98] 1.366 [34.69]	1.550 [39.37]	2.12 [53.8]	.98 [24.9]	1.13 [28.7]	2.13 [54.1]	1.78 [45.2]	2.04 [51.8]
22	1.375 [34.93]	1.502 [38.15] 1.488 [37.79]	1.675 [42.55]	2.25 [57.2]	1.03 [26.2]	1.38 [35.1]	2.29 [58.2]	1.85 [47.0]	2.23 [56.6]
24	1.500 [38.10]	1.627 [41.33] 1.613 [40.97]	1.800 [45.72]	2.38 [60.5]	1.08 [27.4]	1.44 [36.6]	2.42 [61.5]	1.92 [48.8]	2.23 [56.6]

SIZE	CODE IDENT. NO.	DWG. NO.	REV
A	06090	TXR54	H1
DO NOT SCALE THIS DWG		CAD NAME TXR54-3	SHEET 3 OF 3

IF THIS DOCUMENT IS PRINTED IT BECOMES UNCONTROLLED.
CHECK FOR THE LATEST REVISION.