FET INPUT HIGH SPEED VOLTAGE FOLLOWER/BUFFER AMPLIFIER 0033

M.S.KENNEDY CORP.

4707 Dey Road Liverpool, N.Y. 13088 (315) 701-6751

MIL-PRF-38534 CERTIFIED

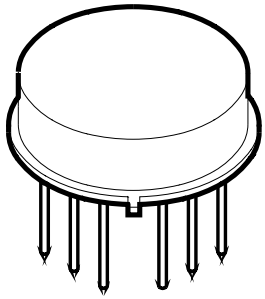

FEATURES:

- Industry Wide LH0033/EL2005 Replacement
- Low Input Offset - 2mV
- Low Input Offset Drift - 25μV/°C
- FET Input, Low Input Current - 50pA
- High Slew Rate - 1500V/μS
- Wide Bandwidth - 140MHz
- High Output Current - ±100mA
- Available to DSCC SMD 5962-80014

DESCRIPTION:

The MSK 0033(B) is a high speed, wide bandwidth voltage follower/buffer amplifier that is pin compatible with all other 0033 designs. The FET input is cascaded to force the input characteristics to remain constant over the full input voltage range. Significantly improved performance in sample and hold circuits is achieved since the DC bias current remains constant with input voltage. The FET input also makes the MSK 0033 very accurate since it produces extremely low input bias current, input offset voltage and input offset voltage drift specifications. Transistion times in the range of 2.5 nS make the MSK 0033 fast enough for most high speed voltage follower/buffer amplifier applications.

EQUIVALENT SCHEMATIC

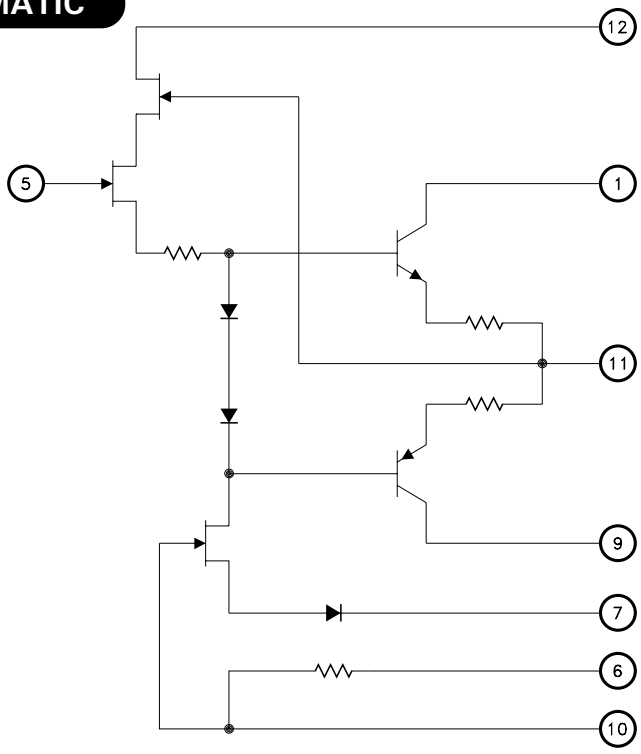

TYPICAL APPLICATIONS

- Sample And Hold
- Impedance Buffers For A to D's
- High Speed Line Drivers
- CRT Deflection Driver

PIN-OUT INFORMATION

1	Positive Driver Power	7	Offset Adjust
2	Supply	8	N/C
3	N/C	9	Negative Driver Power Supply
4	N/C	10	Negative Power Supply
5	N/C	11	Output
6	Input Offset Preset	12	Positive Power Supply

ABSOLUTE MAXIMUM RATINGS

$\pm V_{CC}$	Supply Voltage . . . . . ±20V	T_{ST}	Storage Temperature Range -65°C to +150°C
I_{OUT}	Output Current . . . . . ±120mA	T_{LD}	Lead Temperature Range . . . . . 300°C
V_{IN}	Differential Input Voltage . . . . . ±20V		(10 Seconds)
T_C	Case Operating Temperature	T_J	Junction Temperature . . . . . 175°C
	(MSK 0033B) . . . . . -55°C to +125°C	R_{TH}	Thermal Resistance . . . . . 65°C/W
	(MSK 0033) . . . . . -40°C to +85°C		Junction to Case
			Output Devices Only

ELECTRICAL SPECIFICATIONS

Parameter	Test Conditions	Group A Subgroup	MSK 0033B Min.	MSK 0033B Typ.	MSK 0033B Max.	MSK 0033 Min.	MSK 0033 Typ.	MSK 0033 Max.	Units
STATIC									
Supply Voltage Range ③ ⑧		-	±10	±15	±18	±10	±15	±18	V
Quiescent Current	V_{IN} = 0V	1	-	±19	±22	-	±19	±25	mA
INPUT									
Offset Voltage	Short Pin 6 to Pin 7 V_{IN} = 0V	1	-	±2.0	±10	-	±5	±15	mV
Offset Voltage Drift	Short Pin 6 to Pin 7 V_{IN} = 0V	2,3	-	±25	±250	-	-	-	µV/°C
Offset Adjust	Pin 6 = open R_{POT} = 200Ω From Pin 7 to Pin 9	1,2,3	Adjust to Zero			Adjust to Zero			mV
Input Bias Current ⑨	V_{CM} = 0V	1	-	±50	±100	-	±50	±500	pA
	Either Input	2,3	-	±2	±10	-	±2	-	nA
Input Impedance ③	F = DC	-	-	10^{12}	-	-	10^{12}	-	Ω
Power Supply Rejection Ratio ②	±10V≤Vs≤±20V	-	65	75	-	60	75	-	dB
Input Noise Density ③	F = 10Hz to 1KHz	-	-	1.5	-	-	1.5	-	µVRMS
Input Noise Voltage ③	F = 1KHz	-	-	40	-	-	40	-	nV/√Hz
OUTPUT									
Output Voltage Swing	V_{IN} = ±14V R_L = 1KΩ	4	±12	±12.5	-	±12	±12.5	-	V
Output Current	V_{IN} = ±10.5V R_L = 100Ω	4	±90	±110	-	±90	±110	-	mA
Settling Time to 1% ②③	2V step	-	-	25	-	-	25	-	nS
Bandwidth (-3dB) ③	V_{IN} = 1VRMS R_L = 1KΩ	-	-	140	-	-	140	-	MHz
TRANSFER CHARACTERISTICS									
Slew Rate	V_{OUT} = ±10V	4	1000	1500	-	1000	1500	-	V/µS
Voltage Gain	R_S = 100Ω V_{IN} = 1VRMS F = 1KHz	4	0.97	0.99	-	0.95	0.98	-	V/V

NOTES:

① Unless otherwise specified ±VCC = ±15 VDC.
② Measured within a high speed amplifier feedback loop.
③ Devices shall be capable of meeting the parameter, but need not be tested. Typical parameters are for reference only.
④ Industrial grade devices shall be tested to subgroups 1 and 4 unless otherwise specified.
⑤ Military grade devices ('B' suffix) shall be 100% tested to subgroups 1,2,3 and 4.
⑥ Subgroup 5 and 6 testing available upon request.
⑦ Subgroup 1,4 $T_A = T_C = +25°C$
Subgroup 2,5 $T_A = T_C = +125°C$
Subgroup 3,6 $T_A = T_C = -55°C$
⑧ Electrical specifications are derated for power supply voltages other than ±15VDC.
⑨ Measurement made 0.5 seconds after application of power. Actual DC continuous test limit is 2.5 nA at 25°C

APPLICATION NOTES

HEAT SINKING

To determine if a heat sink is necessary for your application and if so, what type, refer to the thermal model and governing equation below.

Thermal Model:

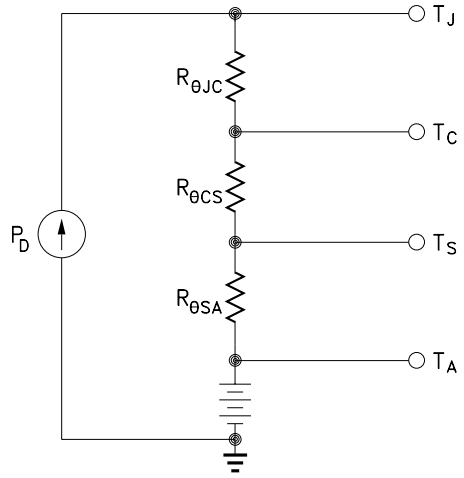

Governing Equation:

$T_J = P_D \times (R_{\theta JC} + R_{\theta CS} + R_{\theta SA}) + T_A$

Where

T_J = Junction Temperature
P_D = Total Power Dissipation
$R_{\theta JC}$ = Junction to Case Thermal Resistance
$R_{\theta CS}$ = Case to Heat Sink Thermal Resistance
$R_{\theta SA}$ = Heat Sink to Ambient Thermal Resistance
T_C = Case Temperature
T_A = Ambient Temperature
T_S = Sink Temperature

Example:

This example demonstrates a worst case analysis for the buffer output stage. This occurs when the output voltage is 1/2 the power supply voltage. Under this condition, maximum power transfer occurs and the output is under maximum stress.

Conditions:
V_{CC} = ±16VDC
V_O = ±8Vp Sine Wave, Freq. = 1KHz
R_L = 100Ω

For a worst case analysis we will treat the ±8Vp sine wave as an 8 VDC output voltage.

1.) Find Driver Power Dissipation
$P_D = (V_{CC}-V_O)(V_O/R_L)$
$= (16V-8V)(8V/100\Omega)$
$= 640mW$
2.) For conservative design, set $T_J = +125°C$ Max.
3.) For this example, worst case $T_A = +80°C$
4.) $R_{\theta JC}$ = 65°C/W from MSK 0033B Data Sheet
5.) $R_{\theta CS}$ = 0.15°C/W for most thermal greases
6.) Rearrange governing equation to solve for $R_{\theta SA}$

$R_{\theta SA} = ((T_J - T_A)/P_D) - (R_{\theta JC}) - (R_{\theta CS})$
$= ((125°C - 80°C) / .64W) - 65°C/W - .15°C/W$
$= 70.3 - 65.15$
$= 5.2°C/W$

The heat sink in this example must have a thermal resistance of no more than 5.2°C/W to maintain a junction temperature of no more than +125°C.

OFFSET VOLTAGE ADJUST

See Figure 1. To externally null the offset voltage, connect a 200Ω potentiometer between Pins 7 and 10 and leave Pin 6 open. If offset null is not necessary, short Pin 6 to Pin 7 and remove the 200Ω potentiometer. Do not connect Pin 7 to -Vcc.

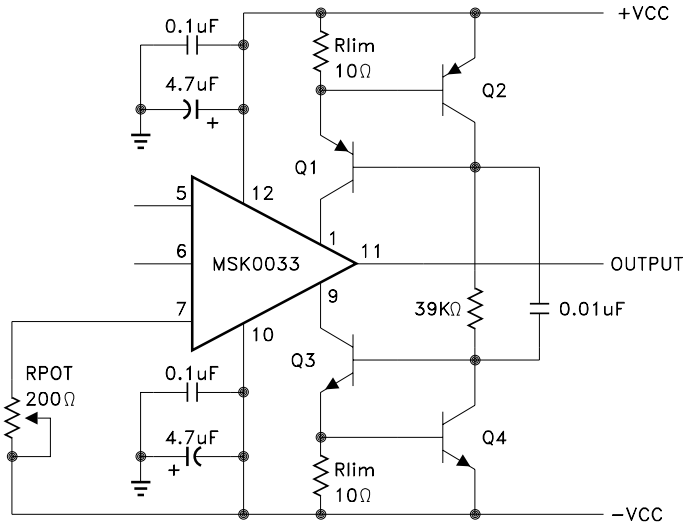

Q1,Q2 = 2N2907
Q3,Q4 = 2N2222

FIGURE 1

CURRENT LIMITING

See Figure 1. If no current limit is required, short Pin 1 to Pin 12 and Pin 9 to Pin 10 and delete Q1 thru Q4 connections. Q1 through Q4 and the Rlim resistors form a current source current limit scheme and current limit resistor values can be calculated as follows:

$$+Rlim \cong \frac{Vbe}{Isc} \qquad -Rlim \cong \frac{Vbe}{Isc}$$

Since current limit is directly proportional to the base-emitter voltage drop of the 2N2222's and 2N2907's in the current limit scheme, the current limit value will change slightly with ambient temperature changes. The base-emitter voltage drop will decrease as temperature increases causing the actual current limit point to decrease.

POWER SUPPLY BYPASSING

Both the negative and the positive power supplies must be effectively decoupled with a high and low frequency bypass circuit to avoid power supply induced oscillation. An effective decoupling scheme consists of a 0.1 microfarad ceramic capacitor in parallel with a 4.7 microfarad tantalum capacitor from each power supply pin to ground.

TYPICAL APPLICATIONS

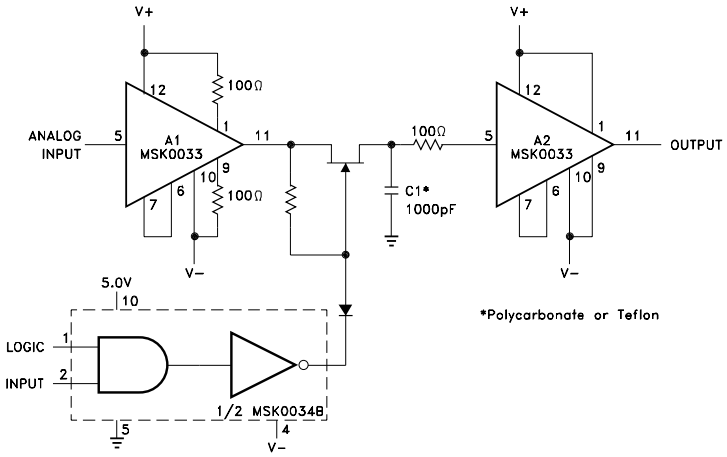

HIGH SPEED SAMPLE AND HOLD

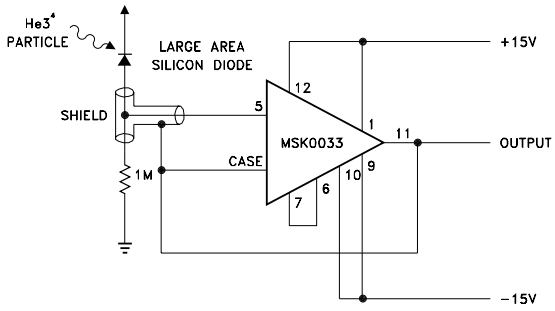

NUCLEAR PARTICLE DETECTOR

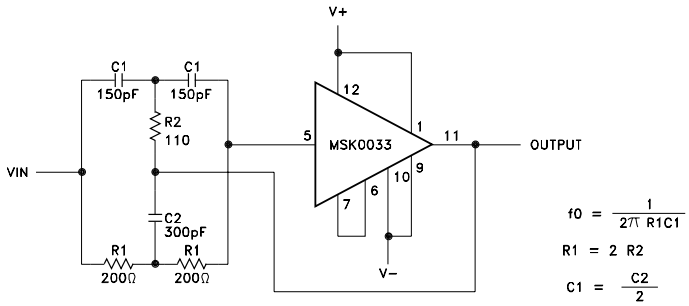

4.5MHz NOTCH FILTER

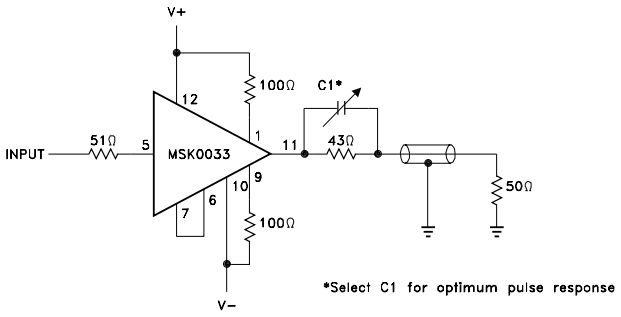

COAXIAL CABLE DRIVER

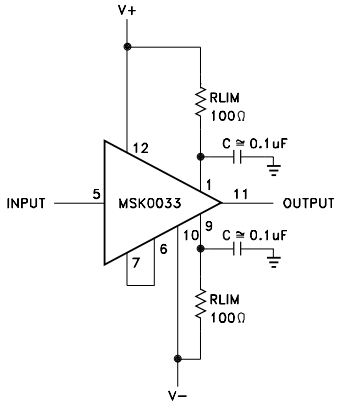

MSK0033 USING RESISTOR CURRENT LIMITING

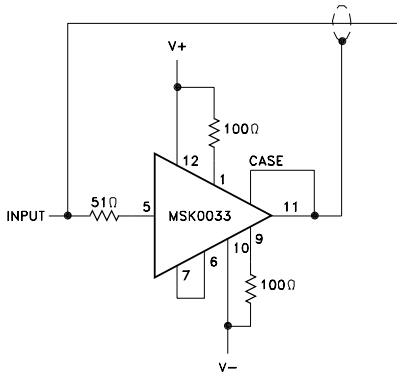

INSTRUMENTATION SHIELD/LINE DRIVER

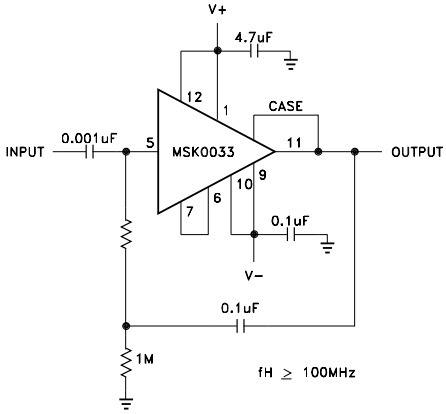

HIGH INPUT IMPEDANCE AC COUPLED AMPLIFIER

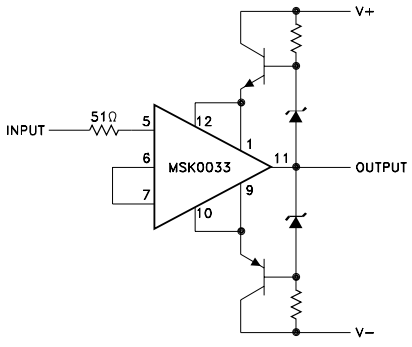

BOOTSTRAPPED SUPPLIES FOR HIGH VOLTAGE APPLICATIONS

TYPICAL PERFORMANCE CURVES

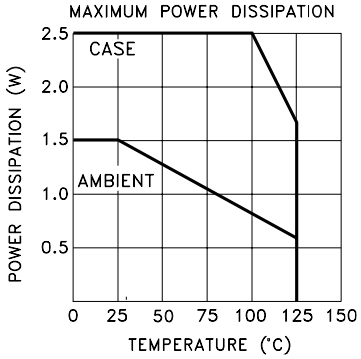

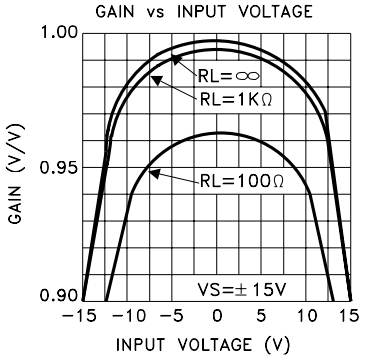

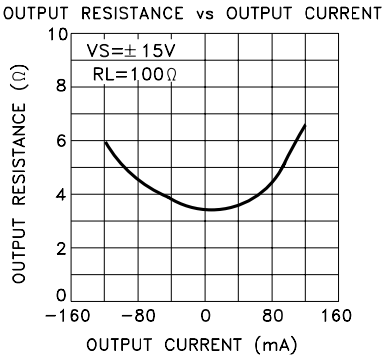

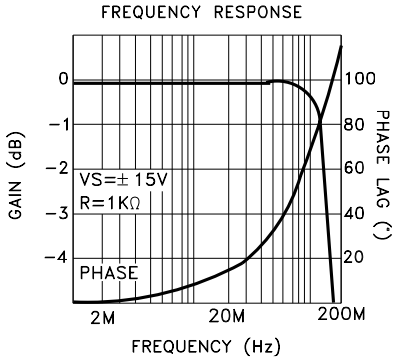

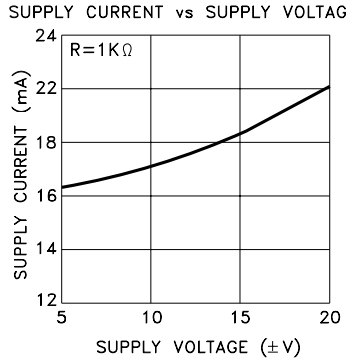

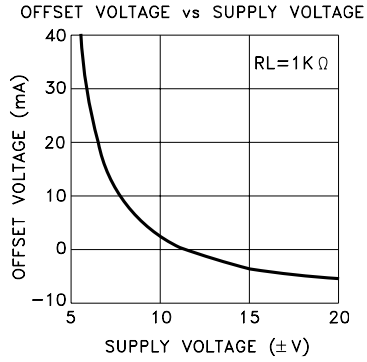

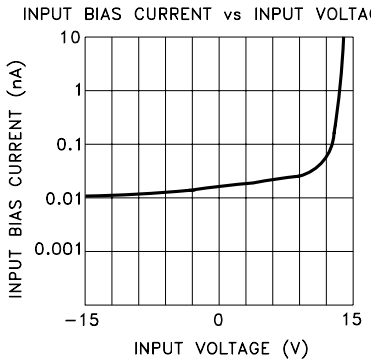

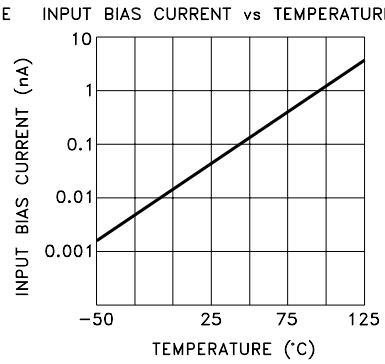

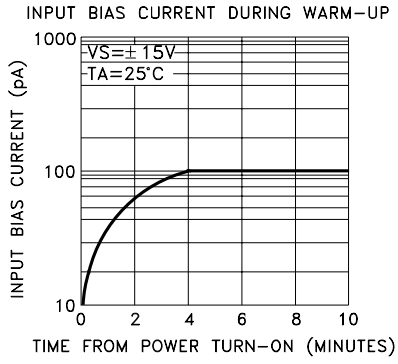

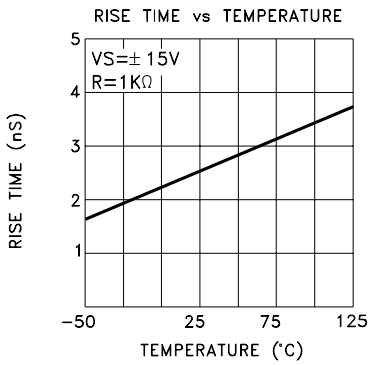

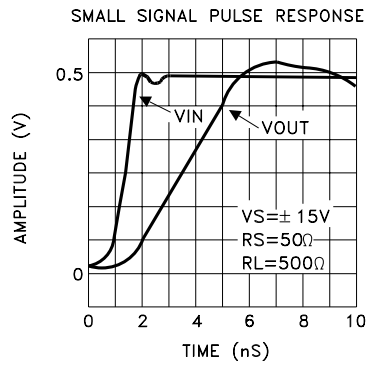

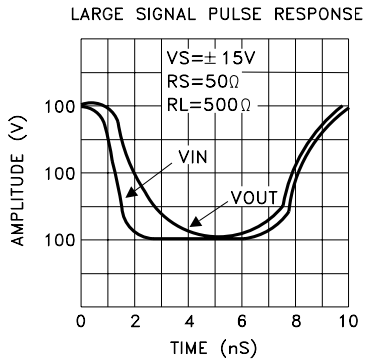

MECHANICAL SPECIFICATIONS

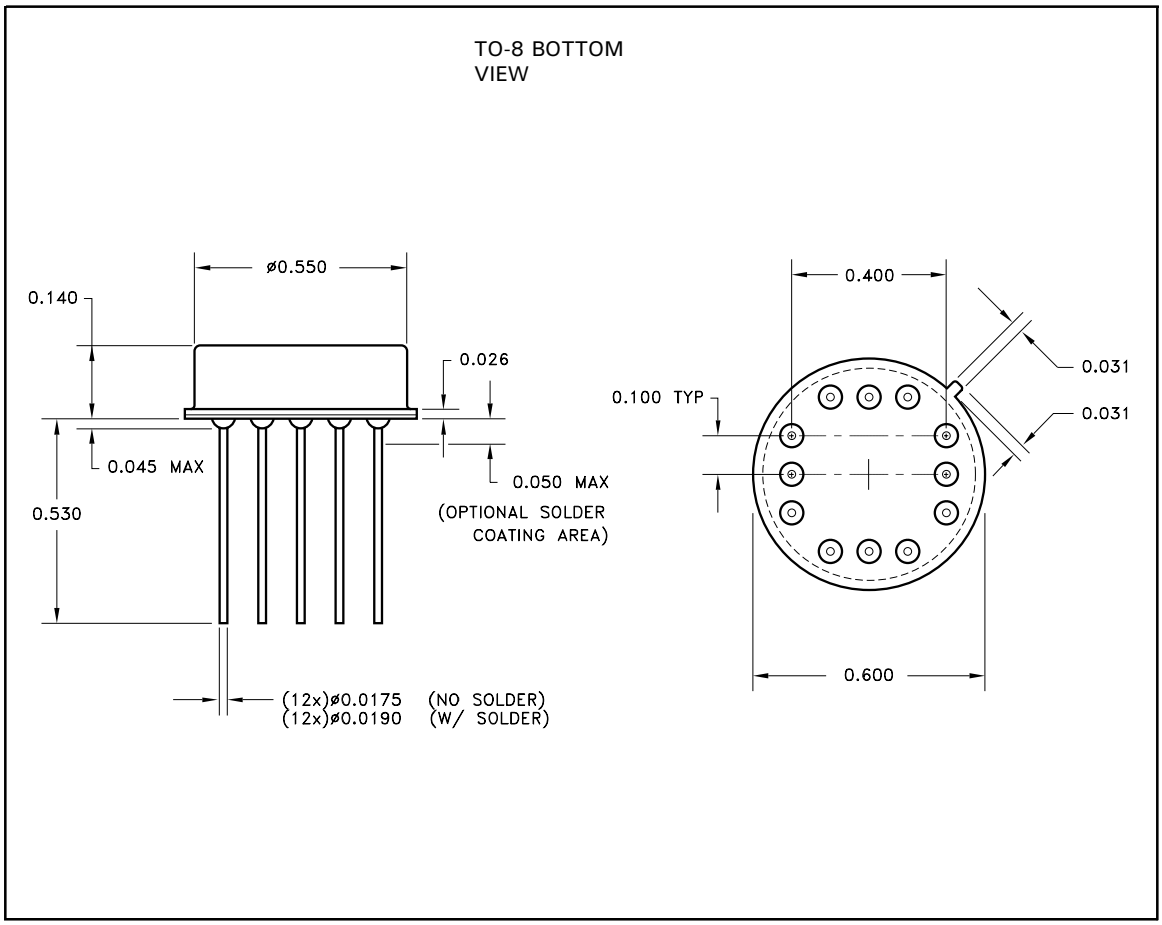

ALL DIMENSIONS ARE ±0.010 INCHES UNLESS OTHERWISE LABELED

ORDERING INFORMATION

Part Number	Screening Level
MSK0033	Industrial
MSK0033B	Military-Mil-PRF-38534
8001401ZX	DSCC - SMD

M.S. Kennedy Corp.
4707 Dey Road, Liverpool, New York 13088
Phone (315) 701-6751
FAX (315) 701-6752
www.mskennedy.com

The information contained herein is believed to be accurate at the time of printing. MSK reserves the right to make changes to its products or specifications without notice, however, and assumes no liability for the use of its products.