This document was generated on 05/26/2010

PLEASE CHECK WWW.MOLEX.COM FOR LATEST PART INFORMATION

Part Number: 0026192111
Status: Active
Overview: kk
Description: 3.96mm (.156") Pitch KK® Wire-to-Board Header, Vertical, Round Pin, with Polarizing Wall, 11 Circuits, Tin (Sn) Plating

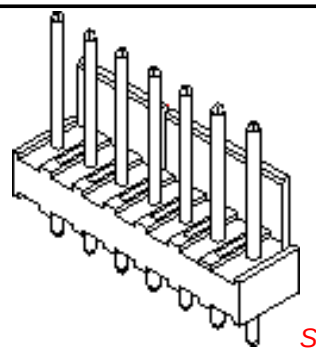

Series image - Reference only

Documents:

- 3D Model
- Drawing (PDF)
- Product Specification PS-99020-0087 (PDF)
- RoHS Certificate of Compliance (PDF)

Agency Certification

CSA	LR19980
TUV	R72090224

General

Product Family	PCB Headers
Series	3190
Application	Wire-to-Board
Overview	kk
Product Name	KK®

Physical

Breakaway	No
Circuits (Loaded)	11
Circuits (maximum)	11
Color - Resin	Natural
Durability (mating cycles max)	25
First Mate / Last Break	No
Flammability	94V-2
Glow-Wire Compliant	No
Guide to Mating Part	No
Keying to Mating Part	None
Lock to Mating Part	None
Material - Metal	Brass
Material - Plating Mating	Tin
Material - Plating Termination	Tin
Material - Resin	Nylon
Number of Rows	1
Orientation	Vertical
PC Tail Length (in)	0.175 In
PC Tail Length (mm)	4.45 mm
PCB Locator	No
PCB Retention	None
PCB Thickness Recommended (in)	0.062 In
PCB Thickness Recommended (mm)	1.60 mm
Packaging Type	Bag
Pitch - Mating Interface (in)	0.156 In
Pitch - Mating Interface (mm)	3.96 mm
Plating min: Mating (µin)	200
Plating min: Mating (µm)	5
Plating min: Termination (µin)	200
Plating min: Termination (µm)	5
Polarized to PCB	No
Shrouded	Partial
Stackable	No
Temperature Range - Operating	0°C to +75°C

EU RoHS
ELV and RoHS Compliant
REACH SVHC
Not Reviewed
Halogen-Free Status
Not Reviewed

China RoHS

Need more information on product environmental compliance?

Email productcompliance@molex.com
For a multiple part number RoHS Certificate of Compliance, click here

Please visit the Contact Us section for any non-product compliance questions.

Search Parts in this Series
3190Series

Mates With
3069 KK® Crimp Terminal Housing. 3215 KK® PC Board Connector

Termination Interface: Style	Through Hole

Electrical

Current - Maximum per Contact	7A
Voltage - Maximum	250V

Solder Process Data

Lead-free Process Capability	Wave Capable (TH only)

Material Info

Old Part Number	319011A

Reference - Drawing Numbers

Product Specification	PS-99020-0087
Sales Drawing	SDAE-3190-N**

This document was generated on 05/26/2010

PLEASE CHECK WWW.MOLEX.COM FOR LATEST PART INFORMATION

ENG No:			AE-3190-NA	AE-3192-NB	AE-3192-NC SEE NOTE 3	AE-3192-NH SEE NOTE 3	AE-3192-NT SEE NOTE 3	AE-3192-NS
DIM "D"			(11.43) .450	(16.18) .637	(26.92) 1.060	(3.56) .140	(3.17) .125	(12.70) .500
DIM "C"			(19.05) .750	(23.80) .937	(31.75) 1.250	(19.05) .750	(19.05) .750	(50.80) 2.000
CCT SIZE	DIM "A"	DIM "B"	PART No	PART No	PART No	PART No	PART No	PART No
2	(3.96) .156	(7.92) .312	26-19-2021	26-19-2022	26-19-2023	26-19-2024	26-19-2025	26-19-2026
3	(7.92) .312	(11.89) .468	26-19-2031	26-19-2032	26-19-2033	26-19-2034	26-19-2035	26-19-2036
4	(11.89) .468	(15.85) .624	26-19-2041	26-19-2042	26-19-2043	26-19-2044	26-19-2045	26-19-2046
5	(15.85) .624	(19.81) .780	26-19-2051	26-19-2052	26-19-2053	26-19-2054	26-19-2055	26-19-2056
6	(19.81) .780	(23.77) .936	26-19-2061	26-19-2062	26-19-2063	26-19-2064	26-19-2065	26-19-2066
7	(23.77) .936	(27.74) 1.092	26-19-2071	26-19-2072	26-19-2073	26-19-2074	26-19-2075	26-19-2076
8	(27.74) 1.092	(31.70) 1.248	26-19-2081	26-19-2082	26-19-2083	26-19-2084	26-19-2085	26-19-2086
9	(31.70) 1.248	(35.66) 1.404	26-19-2091	26-19-2092	26-19-2093	26-19-2094	26-19-2095	26-19-2096
10	(35.66) 1.404	(39.62) 1.560	26-19-2101	26-19-2102	26-19-2103	26-19-2104	26-19-2105	26-19-2106
11	(39.62) 1.560	(43.59) 1.716	26-19-2111	26-19-2112	26-19-2113	26-19-2114	26-19-2115	26-19-2116
12	(43.59) 1.716	(47.55) 1.872	26-19-2121	26-19-2122	26-19-2123	26-19-2124	26-19-2125	26-19-2126
13	(47.55) 1.872	(51.51) 2.028	26-19-2131	26-19-2132	26-19-2133	26-19-2134	26-19-2135	26-19-2136
14	(51.51) 2.028	(55.47) 2.184	26-19-2141	26-19-2142	26-19-2143	26-19-2144	26-19-2145	26-19-2146
15	(55.47) 2.184	(59.44) 2.340	26-19-2151	26-19-2152	26-19-2153	26-19-2154	26-19-2155	26-19-2156
16	(59.44) 2.340	(63.40) 2.496	26-19-2161	26-19-2162	26-19-2163	26-19-2164	26-19-2165	26-19-2166
17	(63.40) 2.496	(67.36) 2.652	26-19-2171	26-19-2172	26-19-2173	26-19-2174	26-19-2175	26-19-2176
18	(67.36) 2.652	(71.32) 2.808	26-19-2181	26-19-2182	26-19-2183	26-19-2184	26-19-2185	26-19-2186
19	(71.32) 2.808	(75.29) 2.964	26-19-2191	26-19-2192	26-19-2193	26-19-2194	26-19-2195	26-19-2196
20	(75.29) 2.964	(79.25) 3.120	26-19-2201	26-19-2202	26-19-2203	26-19-2204	26-19-2205	26-19-2206

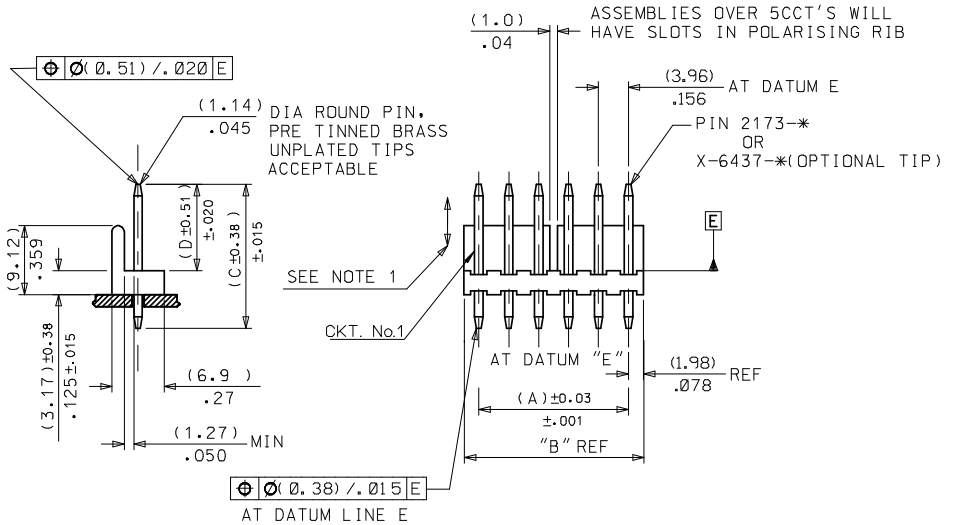

WAFER MATERIAL: NYLON 94V-2

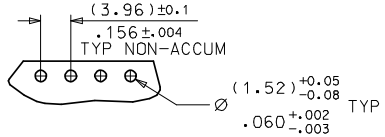

RECOMMENDED PCB HOLE DIMENSIONS

NOTES:
1. PIN PUSH OUT FORCE 3 LBS MIN
2. PIN MUST CONFORM TO MOLEX SOLDERABILITY SPEC No 152 AFTER PLATING
3. ON THE FOLLOWING WAFERS DIM"D" IS FROM THE BOTTOM OF THE PIN TO THE BOTTOM OF THE WAFER: AE-3190-NC, AE-3190-NT, AE-3190-NH
4. RECOMMENDED PCB BOARD 1.6MM

ADDED PCB NOTE
EC NO: E2008-0302 2008/02/04
DRWN:LKIERNAN 2008/02/07
CHKD:
APPR:BMAGUIRE 2008/02/07
DESCRIPTION
REV: AB

QUALITY SYMBOLS
▼=0
Ⓒ=0

GENERAL TOLERANCES (UNLESS SPECIFIED)

	mm	INCH
4 PLACES	± ---	± ---
3 PLACES	± ---	± .010
2 PLACES	± 0.25	± .014
1 PLACE	± 0.35	± ---
ANGULAR ±1/2°		

DRAFT WHERE APPLICABLE MUST REMAIN WITHIN DIMENSIONS

DIMENSION STYLE: MM ONLY
SCALE: 2:1
DESIGN UNITS: METRIC
THIRD ANGLE PROJECTION

		DATE
DRAWN BY	T.MOHON	1998/10/02
CHECKED BY	M GOONEY	1998/10/02
APPROVED BY	MWILHITE	1998/10/02

TITLE: WAFER POL KK .156 FOR .045 ROUND PINS

MOLEX INCORPORATED

MATERIAL NO.: SEE CHART
DOCUMENT NO.: SDAE-3190-N**
SHEET NO.: 1 OF 2
SIZE: A2

THIS DRAWING CONTAINS INFORMATION THAT IS PROPRIETARY TO MOLEX INCORPORATED AND SHOULD NOT BE USED WITHOUT WRITTEN PERMISSION