## 1. Mechanical Dimensions:

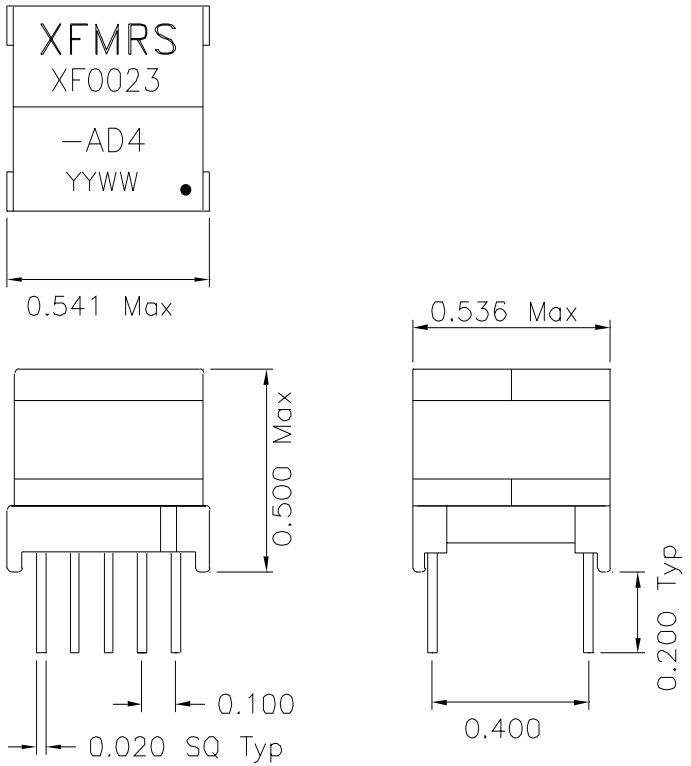


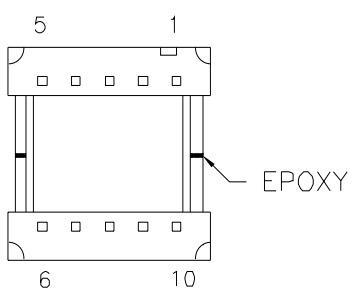


(BOTTOM VIEW)

Note: Designed to meet UL1950 for supplementary insulation, 250 working volts.

## 2. Schematic:

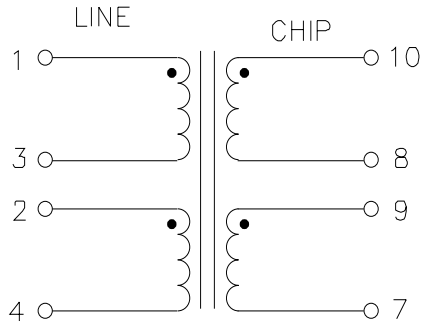


## 3. Electrical Specifications:

Turns Ratio: 1-4:10-7 1:1.27 Tie P2-3,8-9
Isolation Voltage: 2500VAC (CHIP to LINE)
OCL: P1-4 1.80mH MIN 10KHz 0.1V Tie P2-3
OCL: P10-7 2.90mH MIN 10KHz 0.1V Tie P8-9
LL: 1-4 7.5uH Max 100KHz 0.1V
Tie P2-3, Short P8-9-10-7
DC Res.: 10-7 2.0 Ohms MAX
1-4 2.0 Ohms MAX
LOAD: 100 Ohms
THD: -80dB @30KHz
Long. Bal.: 50dB Min @30KHz-1.1MHz
Insertion Loss: 0.5dB Max @100KHz
Freq. Resp.: ±1dB @30KHz-1.1MHz

DOC. REV: A/1

| | | | |
|---|---|---|---|
| XFMRS Inc | Title: ADSL LINE DRIVER XFMR | | |
| UNLESS OTHERWISE SPECIFIED TOLERANCES: .xxx ±0.010 Dimensions in INCH | P/N: XF0023-AD4 | | REV. A |
| | DWN. | 李清儿 | Dec-6-99 |
| | CHK. | 孙悦 | Dec-6-99 |
| Scale 1.5:1 SHT 1 OF 1 | APP. | Buddy | Dec-6-99 |

THIS DOCUMENT IS STRICTLY NOT ALLOWED TO BE DUPLICATED WITHOUT AUTHORIZATION