This document was generated on 06/08/2010

PLEASE CHECK WWW.MOLEX.COM FOR LATEST PART INFORMATION

Part Number: 0022433090
Status: Active
Description: 2.5 SPOX IDT RECEPTACLE WHITE 9CKT

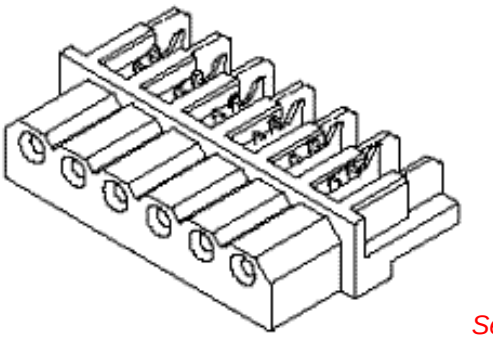

Series image - Reference only

Documents:

3D Model
Drawing (PDF)
Product Specification PS-42219-0001 (PDF)
RoHS Certificate of Compliance (PDF)

Agency Certification

CSA	LR19980
UL	E29179

General

Product Family	IDT and Solder Connectors
Series	42219
Comments	Spring Box|Use with 24 AWG solid
Crimp Quality Equipment	Yes
Product Name	SPOX™

Physical

Circuits (Loaded)	9
Color - Resin	Natural
Durability (mating cycles max)	25
Flammability	94V-0
Gender	Female
Glow-Wire Compliant	No
Lock to Mating Part	None
Material - Metal	Phosphor Bronze
Material - Plating Mating	Tin
Material - Plating Termination	Tin
Material - Resin	Polyester
Number of Rows	1
Packaging Type	Bag
Panel Mount	No
Pitch - Mating Interface (in)	0.098 In
Pitch - Mating Interface (mm)	2.50 mm
Plating min: Mating (µin)	100
Plating min: Mating (µm)	2.50
Plating min: Termination (µin)	100
Plating min: Termination (µm)	2.50
Stackable	No
Temperature Range - Operating	0°C to +75°C
Termination Interface: Style	IDT or Pierce
Wire Size AWG	24, 26

Electrical

Current - Maximum per Contact	3A
Voltage - Maximum	250V

Material Info

Old Part Number	A4221909A

Reference - Drawing Numbers

Product Specification	PS-42219-0001
Sales Drawing	SDA-42219-*

EU RoHS
ELV and RoHS Compliant
REACH SVHC
Contains SVHC: No
Halogen-Free Status
Not Halogen-Free

China RoHS

Need more information on product environmental compliance?

Email productcompliance@molex.com
For a multiple part number RoHS Certificate of Compliance, click here

Please visit the Contact Us section for any non-product compliance questions.

Search Parts in this Series
42219Series

Mates With
Headers, 5267 , 42249 , 42267 , 5268

Application Tooling | **FAQ**

Tooling specifications and manuals are found by selecting the products below. Crimp Height Specifications are then contained in the Application Tooling Specification document.

Global

Description	Product #
IDT - Manual Press	0011219757
Hawk™ Discrete Wire Terminator Machine 2.5mm	0623000500
Hawk™ Discrete Wire Terminator Machine 2.5mm	0623000700
Changehead for Parallel Action Handtool	0690080290

69008-0949 for
2.5mm User Friendly

This document was generated on 06/08/2010

PLEASE CHECK WWW.MOLEX.COM FOR LATEST PART INFORMATION

DISCRETE CONN. CKT SIZE	NO OF CONN. IN CHAIN	DIM. A	DIM. B	DIM. C	PASSIVE LOCKING BUMPS
2	10	.292 (7.42)	.098 (2.50)	2.756 (70.00)	YES
3	8	.390 (9.92)	.197 (5.00)	2.953 (75.00)	YES
4	6	.489 (12.42)	.295 (7.50)	2.756 (70.00)	YES
5	5	.587 (14.92)	.394 (10.00)	2.756 (70.00)	YES
6	4	.685 (17.40)	.492 (12.50)	2.556 (65.00)	YES
7	4	.783 (19.90)	.591 (15.00)	2.952 (75.00)	YES
8	3	.882 (22.40)	.689 (17.50)	2.461 (62.50)	YES
9	3	.980 (24.90)	.787 (20.00)	2.756 (70.00)	NO
10	2	1.079 (27.40)	.886 (22.50)	1.969 (50.00)	NO
11	2	1.177 (29.90)	.984 (25.00)	2.165 (55.00)	NO
12	2	1.276 (32.40)	1.082 (27.50)	2.362 (60.00)	NO
13	2	1.374 (34.90)	1.181 (30.00)	2.559 (65.00)	NO
14	2	1.472 (37.40)	1.279 (32.50)	2.756 (70.00)	NO
15	2	1.571 (39.90)	1.378 (35.00)	2.952 (75.00)	NO

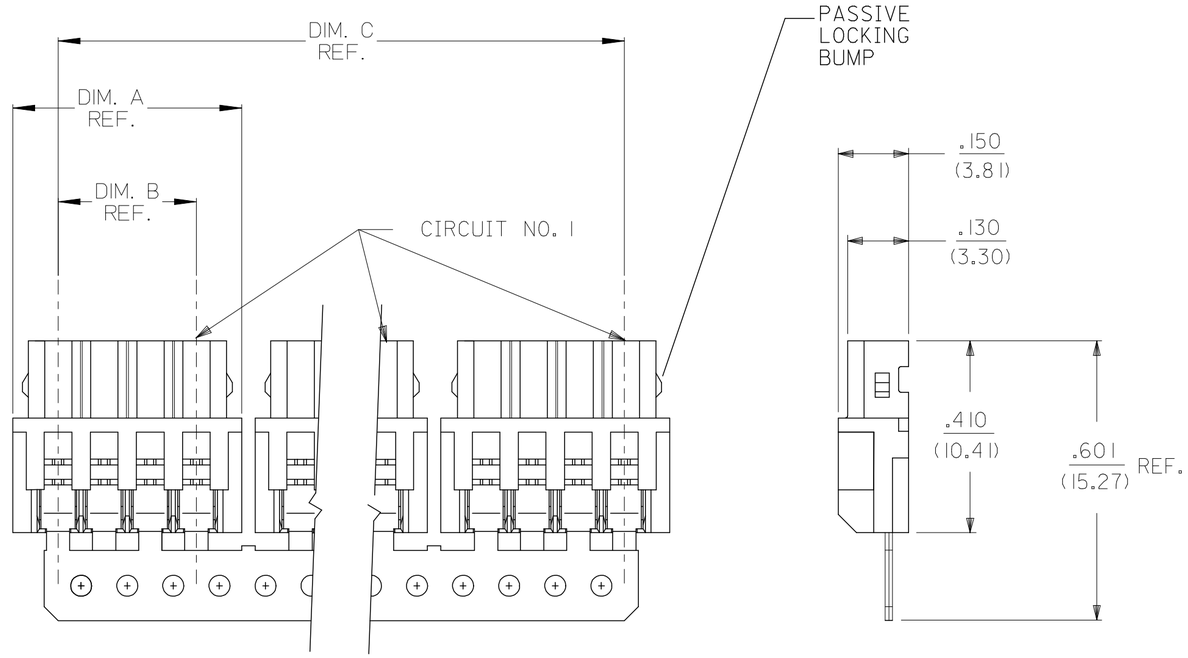

NOTES:
1. MATERIAL:
   HOUSING: POLYESTER, 7.5% GLASS FILLED, 94V-0
   TERMINAL: PHOS. BRONZE
2. FINISH:
   (P909) *OVERALL HOT TIN DIP: .000100/0.00254 MIN.
   *THE PRIMARY SHIPPING CARTON WILL BE LABELED "COMPLIANT TO RoHS DIRECTIVE 2002/95/EC AND ELV ANNEX II OF DIRECTIVE 2000/53/EC". CARTONS WITHOUT THIS LABEL MAY CONTAIN PRODUCT WITH TIN/LEAD PLATINGS.
3. FOR PRODUCT SPEC'S SEE PS-42219-0001
4. PACKAGING SPECIFICATION: SEE LENGEND
5. THE WIRE TERMINATION SPEC IS SMES-42219-0002.
6. THIS PART CONFORMS TO CLASS B REQUIREMENTS OF COSMETIC SPECIFICATION PS-45499-002.

42219-N**-*
- NO OF CKTS
- HOUSING COLOR
  - A= (NATURAL)
  - B= (BLUE)
  - C= (BROWN)
  - D= (RED)
  - E= (ORANGE)
  - F= (YELLOW)
  - G= (GREEN)
  - H= (GRAY)
- TERMINAL
  - BLANK=42218
- PACKAGING SPEC.
  - BLANK= PK-70873-0140 (LARGE BOX)
  - 1= PK-40873-0061 (SMALL BOX)

SHT.	REV.
3	J1
2	J1
1	J1

UPDATE NOTES
EC NO: UCP2007-1815 2007/01/26
DRWN:PRIDDER 2007/01/30
CH'KD:ADERR 2007/02/01
APPR:FSMITH
DESCRIPTION
J1
REV

QUALITY SYMBOLS
▼=0
▽C=0

GENERAL TOLERANCES (UNLESS SPECIFIED)

	mm	INCH
4 PLACES	± ---	± ---
3 PLACES	± ---	± .010
2 PLACES	± 0.25	± .014
1 PLACE	± 0.36	± ---

ANGULAR ±1/2°

DRAFT WHERE APPLICABLE MUST REMAIN WITHIN DIMENSIONS

DIMENSION STYLE: IN/MM	SCALE: 4:1	DESIGN UNITS: METRIC	THIRD ANGLE PROJECTION

DRAWN BY: AG	DATE: 1989/02/06
CHECKED BY: RE	DATE: 1989/02/06
APPROVED BY: WRL	DATE: 1989/02/06

TITLE: 2.5MM I.D.T. CONNECTOR ASSEMBLY

molex MOLEX INCORPORATED

MATERIAL NO.	DOCUMENT NO.	SHEET NO.
SEE CHART	SDA-42219-*	1 OF 3

SIZE C

THIS DRAWING CONTAINS INFORMATION THAT IS PROPRIETARY TO MOLEX INCORPORATED AND SHOULD NOT BE USED WITHOUT WRITTEN PERMISSION

A-42219-NA	
PART NO.	ENG. NO.
22-43-3020	A-42219-2A
22-43-3030	A-42219-3A
22-43-3040	A-42219-4A
22-43-3050	A-42219-5A
22-43-3060	A-42219-6A
22-43-3070	A-42219-7A
22-43-3080	A-42219-8A
22-43-3090	A-42219-9A
22-43-3100	A-42219-10A
22-43-3110	A-42219-11A
22-43-3120	A-42219-12A
22-43-3130	A-42219-13A
22-43-3140	A-42219-14A
22-43-3150	A-42219-15A

A-42219-NA-R	
PART NO.	ENG. NO.
	A-42219-2A-R
	A-42219-3A-R
	A-42219-4A-R
	A-42219-5A-R
	A-42219-6A-R
	A-42219-7A-R
	A-42219-8A-R
	A-42219-9A-R
	A-42219-10A-R
	A-42219-11A-R
	A-42219-12A-R
	A-42219-13A-R
	A-42219-14A-R
	A-42219-15A-R

A-42219-NB	
PART NO.	ENG. NO.
22-44-6026	A-42219-2B
22-44-6036	A-42219-3B
22-44-6046	A-42219-4B
22-44-6056	A-42219-5B
	A-42219-6B
	A-42219-7B
	A-42219-8B
	A-42219-9B
	A-42219-10B
	A-42219-11B
	A-42219-12B
	A-42219-13B
	A-42219-14B
	A-42219-15B

A-42219-NC	
PART NO.	ENG. NO.
	A-42219-2C
	A-42219-3C
	A-42219-4C
	A-42219-5C
	A-42219-6C
	A-42219-7C
	A-42219-8C
	A-42219-9C
	A-42219-10C
	A-42219-11C
	A-42219-12C
	A-42219-13C
	A-42219-14C
	A-42219-15C

A-42219-ND	
PART NO.	ENG. NO.
22-44-6022	A-42219-2D
22-44-6032	A-42219-3D
22-44-6042	A-42219-4D
22-44-6052	A-42219-5D
22-44-6062	A-42219-6D
22-44-6072	A-42219-7D
22-44-6082	A-42219-8D
22-44-6092	A-42219-9D
22-44-6102	A-42219-10D
	A-42219-11D
22-44-6122	A-42219-12D
	A-42219-13D
22-44-6142	A-42219-14D
	A-42219-15D

A-42219-NE	
PART NO.	ENG. NO.
22-44-6024	A-42219-2E
22-44-6034	A-42219-3E
22-44-6044	A-42219-4E
22-44-6054	A-42219-5E
22-44-6064	A-42219-6E
22-44-6074	A-42219-7E
22-44-6084	A-42219-8E
22-44-6094	A-42219-9E
22-44-6104	A-42219-10E
	A-42219-11E
	A-42219-12E
	A-42219-13E
	A-42219-14E
	A-42219-15E

A-42219-NF	
PART NO.	ENG. NO.
22-44-6021	A-42219-2F
22-44-6031	A-42219-3F
22-44-6041	A-42219-4F
22-44-6051	A-42219-5F
22-44-6061	A-42219-6F
22-44-6071	A-42219-7F
	A-42219-8F
22-44-6091	A-42219-9F
22-44-6101	A-42219-10F
	A-42219-11F
	A-42219-12F
	A-42219-13F
	A-42219-14F
	A-42219-15F

A-42219-NG	
PART NO.	ENG. NO.
22-44-6023	A-42219-2G
22-44-6033	A-42219-3G
22-44-6043	A-42219-4G
22-44-6053	A-42219-5G
22-44-6063	A-42219-6G
22-44-6073	A-42219-7G
22-44-6083	A-42219-8G
22-44-6093	A-42219-9G
22-44-6103	A-42219-10G
22-44-6113	A-42219-11G
22-44-6123	A-42219-12G
22-44-6133	A-42219-13G
22-44-6143	A-42219-14G
22-44-6153	A-42219-15G

PART NO.	ENG. NO.

A-42219-NA-1	
PART NO.	ENG. NO.
22-43-3022	A-42219-2A-1
22-43-3032	A-42219-3A-1
22-43-3042	A-42219-4A-1
22-43-3052	A-42219-5A-1
22-43-3062	A-42219-6A-1
22-43-3072	A-42219-7A-1
22-43-3082	A-42219-8A-1
22-43-3092	A-42219-9A-1
22-43-3102	A-42219-10A-1
22-43-3112	A-42219-11A-1
22-43-3122	A-42219-12A-1
22-43-3132	A-42219-13A-1
22-43-3142	A-42219-14A-1
22-43-3152	A-42219-15A-1

A-42219-NH	
PART NO.	ENG. NO.
	A-42219-2H
	A-42219-3H
	A-42219-4H
	A-42219-5H
	A-42219-6H
	A-42219-7H
	A-42219-8H
	A-42219-9H
	A-42219-10H
	A-42219-11H
	A-42219-12H
	A-42219-13H
	A-42219-14H
	A-42219-15H

PART NO.	ENG. NO.

ADD 22-44-6122/6142
EC NO: UCP2007-1815
DRWN:PRIDDER 2007/01/26
CH'KD:ADERR 2007/01/30
APPR:FSMITH 2007/02/01
DESCRIPTION
REV J1

QUALITY SYMBOLS
▼=0
▽=0

GENERAL TOLERANCES (UNLESS SPECIFIED)

	mm	INCH
4 PLACES	± ---	± ---
3 PLACES	± ---	± ---
2 PLACES	± ---	± ---
1 PLACE	± ---	± ---
ANGULAR ±1/2°		

DRAFT WHERE APPLICABLE MUST REMAIN WITHIN DIMENSIONS

DIMENSION STYLE: IN/MM
SCALE: ---
DESIGN UNITS: METRIC
THIRD ANGLE PROJECTION

DRAWN BY: SCHMIDGALL DATE: 1991/05/17
CHECKED BY: EDGLEY DATE: 1991/05/17
APPROVED BY: LENZ DATE: 1991/05/17

TITLE: 2.5 MM I.D. CONNECTOR ADDEMBLY

MOLEX INCORPORATED

MATERIAL NO.: SEE CHART
DOCUMENT NO.: SDA-42219-*
SHEET NO.: 2 OF 3

SIZE C

THIS DRAWING CONTAINS INFORMATION THAT IS PROPRIETARY TO MOLEX INCORPORATED AND SHOULD NOT BE USED WITHOUT WRITTEN PERMISSION