This document was generated on 03/22/2010

PLEASE CHECK WWW.MOLEX.COM FOR LATEST PART INFORMATION

Part Number: 0022281040

Status: Active

Description: 2.54mm (.100") Pitch KK® Header, Breakaway, Right Angle, with Friction Lock, 4 Circuits, Tin (Sn) Plating

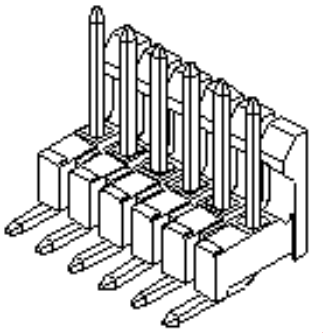

Series image - Reference only

Documents:

3D Model
Packaging Specification (PDF)
Drawing (PDF)
Product Specification PS-10-07 (PDF)
RoHS Certificate of Compliance (PDF)

Agency Certification

CSA	LR19980
UL	E29179

General

Product Family	PCB Headers
Series	42228
Application	Wire-to-Board
Product Name	KK®

Physical

Breakaway	Yes
Circuits (Loaded)	4
Circuits (maximum)	4
Color - Resin	Black
Durability (mating cycles max)	25
Flammability	94V-0
Glow-Wire Compliant	No
Lock to Mating Part	Yes
Material - Metal	Brass
Material - Plating Mating	Tin
Material - Plating Termination	Tin
Material - Resin	Nylon
Number of Rows	1
Orientation	Right Angle
PC Tail Length (in)	0.120 In
PC Tail Length (mm)	3.05 mm
PCB Locator	No
PCB Retention	None
PCB Thickness Recommended (in)	0.062 In
PCB Thickness Recommended (mm)	1.60 mm
Packaging Type	Bag
Pitch - Mating Interface (in)	0.100 In
Pitch - Mating Interface (mm)	2.54 mm
Plating min: Mating (µin)	100
Plating min: Mating (µm)	2.5
Plating min: Termination (µin)	100
Plating min: Termination (µm)	2.5
Polarized to Mating Part	Yes
Polarized to PCB	No
Shrouded	Partial
Stackable	No
Temperature Range - Operating	0°C to +75°C
Termination Interface: Style	Through Hole

Electrical

EU RoHS
ELV and RoHS Compliant
REACH SVHC
Not Reviewed
Halogen-Free Status
Not Reviewed

China RoHS

Need more information on product environmental compliance?

Email productcompliance@molex.com
For a multiple part number RoHS Certificate of Compliance, click here

Please visit the Contact Us section for any non-product compliance questions.

Search Parts in this Series
42228Series

Mates With
2695 , 6471 , 7880 , 4455 , 7720

Current - Maximum per Contact	4A
Voltage - Maximum	250V

Solder Process Data

Duration at Max. Process Temperature (seconds)	5
Lead-free Process Capability	Wave Capable (TH only)
Max. Cycles at Max. Process Temperature	1
Process Temperature max. C	235

Material Info

Old Part Number	42228-0004

Reference - Drawing Numbers

Product Specification	PS-10-07
Sales Drawing	SD-42228-001, SD-42228-002, SD-42228-003

This document was generated on 03/22/2010

PLEASE CHECK WWW.MOLEX.COM FOR LATEST PART INFORMATION

CKTS	DIM A	DIM B
2	.200/5.08	.100/2.54
3	.300/7.62	.200/5.08
4	.400/10.16	.300/7.62
5	.500/12.70	.400/10.16
6	.600/15.24	.500/12.70
7	.700/17.78	.600/15.24
8	.800/20.32	.700/17.78
9	.900/22.86	.800/20.32
10	1.000/25.40	.900/22.86
11	1.100/27.94	1.000/25.40
12	1.200/30.48	1.100/27.94
13	1.300/33.02	1.200/30.48
14	1.400/35.56	1.300/33.02
15	1.500/38.10	1.400/35.56
16	1.600/40.64	1.500/38.10
17	1.700/43.18	1.600/40.64
18	1.800/45.72	1.700/43.18
19	1.900/48.26	1.800/45.72
20	2.000/50.80	1.900/48.26
21	2.100/53.34	2.000/50.80
22	2.200/55.88	2.100/53.34
23	2.300/58.42	2.200/55.88
24	2.400/60.96	2.300/58.42
25	2.500/63.50	2.400/60.96
26	2.600/66.04	2.500/63.50
27	2.700/68.58	2.600/66.04
28	2.800/71.12	2.700/68.58
29	2.900/73.66	2.800/71.12
30	3.000/76.20	2.900/73.66
31	3.100/78.74	3.000/76.20
32	3.200/81.28	3.100/78.74
33	3.300/83.82	3.200/81.28
34	3.400/86.36	3.300/83.82
35	3.500/88.90	3.400/86.36
36	3.600/91.44	3.500/88.90

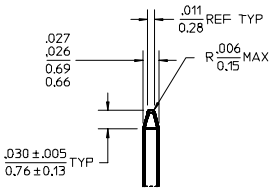

DETAIL X
SCALE 5:1

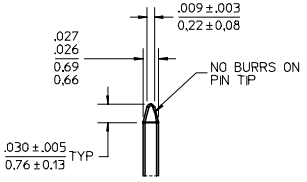

DETAIL Y
SCALE 5:1

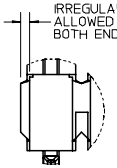

DETAIL Z
SCALE 5:1

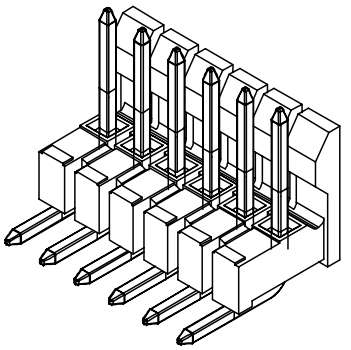

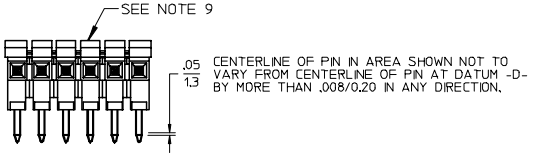

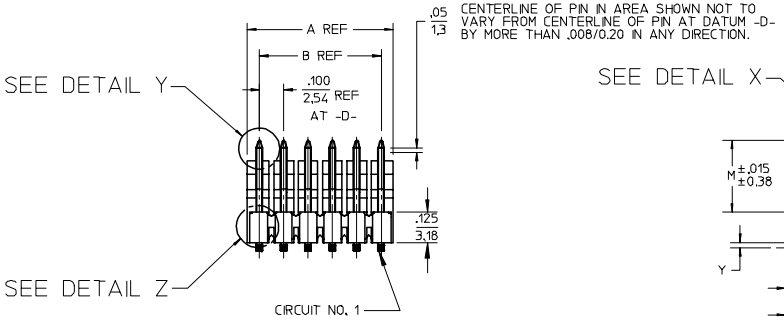

NOTES:
1. MATERIAL:GLASS FILLED NYLON, 94V-0, COLOR: BLACK
2. FINISH:
   (154) *OVERALL TIN: .000100/0.00254 MIN.
   OVER .000050/0.00127 MIN NICKEL.
   (208) SELECT GOLD: .000015/0.00038 MIN.
   *SELECT TIN: .000100/0.00254 MIN.
   OVERALL NICKEL UNDERPLATE: .000050/0.00127 MIN.
   (228) SELECT GOLD: .000030/0.00076 MIN.
   *SELECT TIN: .000100/0.00254 MIN.
   OVERALL NICKEL UNDERPLATE: .000050/0.00127 MIN.
   *THE PRIMARY SHIPPING CARTON WILL BE LABELED
   "COMPLIANT TO RoHS DIRECTIVE 2002/95/EC AND ELV
   ANNEX II OF DIRECTIVE 2000/53/EC". CARTONS WITHOUT
   THIS LABEL MAY CONTAIN PRODUCT WITH TIN-LEAD PLATING
3. PRODUCT SPECIFICATION: PS-10-07.
4. PACKAGING INFORMATION: SEE TABLES
5. KINK PIN SPECIFICATION: SEE SMES-42003
6. HEADERS ARE NOT STACKABLE ON .100/2.54 CENTERS.
7. SOLDERABILITY PER SMES-152.
8. PIN PUSH OUT FORCE: 3 LBS. MIN.
9. ABRASION MARKS ON BACK WALL SURFACE ARE PERMISSIBLE.

2-*	L
1	L4
SHT	REV

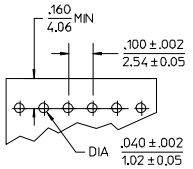

RECOMMENDED PC BOARD LAYOUT

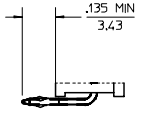

KINKED PIN DETAIL
SEE NOTE 5

REV	DESCRIPTION	DRWN:ADERR	CHKD:LSCHMIDT	APPR:FSMITH
L4	ADD NOTE 9 EC NO: UCP2006-1710	2006/02/01	2006/02/02	2006/02/06

QUALITY SYMBOLS
▼=0
▽=0

GENERAL TOLERANCES (UNLESS SPECIFIED)

	mm	INCH
4 PLACES	± ---	± ---
3 PLACES	± ---	± .010
2 PLACES	± 0.25	± .014
1 PLACE	± 0.36	± ---
ANGULAR ±1/2°		

DRAFT WHERE APPLICABLE MUST REMAIN WITHIN DIMENSIONS

DIMENSION STYLE: IN/MM
SCALE: 2:1
DESIGN UNITS: INCH
THIRD ANGLE PROJECTION

DRAWN BY	JSCHAFER
DATE	2004/03/18
CHECKED BY	KSAMIEC
DATE	2004/03/18
APPROVED BY	MARGULIS
DATE	2004/03/18

TITLE: .100 FRICTION LOCK BREAKAWAY HEADER ASSY

molex MOLEX INCORPORATED

MATERIAL NO.: SEE CHART
DOCUMENT NO.: SD-42228-001
SHEET NO.: 1 OF 4

SIZE B

THIS DRAWING CONTAINS INFORMATION THAT IS PROPRIETARY TO MOLEX INCORPORATED AND SHOULD NOT BE USED WITHOUT WRITTEN PERMISSION

A-42228-0002/0036	
HEADER NUMBER:	41411
PIN NUMBER:	42663-CKA154
PIN LENGTH: L	.705/17.91
MATING LENGTH: M	.295/7.49
GOLD POINT: G	N/A
PC TAIL LENGTH: P	.120/3.05
TIN: T	OVERALL
DIMENSION Y	.022/0.56
CKTS:	2-36
KINKS:	NO
REMOVED BACKWALLS:	NO
VOIDED CKTS:	NONE
PACKAGING:	BULK 40873-0056

CKTS	MATERIAL NUMBER	ENG NUMBER	CKTS	MATERIAL NUMBER	ENG NUMBER
02	22-28-1020	A-42228-0002	20	22-28-1200	A-42228-0020
03	22-28-1030	A-42228-0003	21	22-28-1210	A-42228-0021
04	22-28-1040	A-42228-0004	22	22-28-1220	A-42228-0022
05	22-28-1050	A-42228-0005	23	22-28-1230	A-42228-0023
06	22-28-1060	A-42228-0006	24	22-28-1240	A-42228-0024
07	22-28-1070	A-42228-0007	25	22-28-1250	A-42228-0025
08	22-28-1080	A-42228-0008	26	22-28-1260	A-42228-0026
09	22-28-1090	A-42228-0009	27	22-28-1270	A-42228-0027
10	22-28-1100	A-42228-0010	28	22-28-1280	A-42227-0028
11	22-28-1110	A-42228-0011	29	22-28-1290	A-42228-0029
12	22-28-1120	A-42228-0012	30	22-28-1300	A-42228-0030
13	22-28-1130	A-42228-0013	31	22-28-1310	A-42228-0031
14	22-28-1140	A-42228-0014	32	22-28-1320	A-42228-0032
15	22-28-1150	A-42228-0015	33	22-28-1330	A-42228-0033
16	22-28-1160	A-42228-0016	34	22-28-1340	A-42228-0034
17	22-28-1170	A-42228-0017	35	22-28-1350	A-42228-0035
18	22-28-1180	A-42228-0018	36	22-28-1360	A-42228-0036
19	22-28-1190	A-42228-0019			

A-42228-0037/0071	
HEADER NUMBER:	41411
PIN NUMBER:	42663-CKB208
PIN LENGTH: L	.705/17.91
MATING LENGTH: M	.295/7.49
GOLD POINT: G	.140/3.56
PC TAIL LENGTH: P	.120/3.05
TIN: T	.135/3.43
DIMENSION Y	.022/0.56
CKTS:	2-36
KINKS:	NO
REMOVED BACKWALLS:	NO
VOIDED CKTS:	NONE
PACKAGING:	BULK 40873-0056

CKTS	MATERIAL NUMBER	ENG NUMBER	CKTS	MATERIAL NUMBER	ENG NUMBER
02	22-28-1021	A-42228-0037	20	22-28-1201	A-42228-0055
03	22-28-1031	A-42228-0038	21	22-28-1211	A-42228-0056
04	22-28-1041	A-42228-0039	22	22-28-1221	A-42228-0057
05	22-28-1051	A-42228-0040	23	22-28-1231	A-42228-0058
06	22-28-1061	A-42228-0041	24	22-28-1241	A-42228-0059
07	22-28-1071	A-42228-0042	25	22-28-1251	A-42228-0060
08	22-28-1081	A-42228-0043	26	22-28-1261	A-42228-0061
09	22-28-1091	A-42228-0044	27	22-28-1271	A-42228-0062
10	22-28-1101	A-42228-0045	28	22-28-1281	A-42228-0063
11	22-28-1111	A-42228-0046	29	22-28-1291	A-42228-0064
12	22-28-1121	A-42228-0047	30	22-28-1301	A-42228-0065
13	22-28-1131	A-42228-0048	31	22-28-1311	A-42228-0066
14	22-28-1141	A-42228-0049	32	22-28-1321	A-42228-0067
15	22-28-1151	A-42228-0050	33	22-28-1331	A-42228-0068
16	22-28-1161	A-42228-0051	34	22-28-1341	A-42228-0069
17	22-28-1171	A-42228-0052	35	22-28-1351	A-42228-0070
18	22-28-1181	A-42228-0053	36	22-28-1361	A-42228-0071
19	22-28-1191	A-42228-0054			

REV:		TITLE:	SHEET No.
L		.100 FRICTION LOCK BREAKAWAY HEADER ASSY.	**- 2 -**

DOCUMENT NUMBER:	CREATED / REVISED BY:	CHECKED BY:	APPROVED BY:
SD- 42228 -001	**S. LINEHAN 03/04/2004**	**K.SAMIEC 03/04/2004**	**Y. MARGULIS 03/04/2004**

A-42228-0072/0106	
HEADER NUMBER:	41411
PIN NUMBER:	42663-CKB228
PIN LENGTH: L	.705/17.91
MATING LENGTH: M	.295/7.49
GOLD POINT: G	.140/3.56
PC TAIL LENGTH: P	.120/3.05
TIN: T	.135/3.43
DIMENSION Y	.022/0.56
CKTS:	2-36
KINKS:	NO
REMOVED BACKWALLS:	NO
VOIDED CKTS:	NONE
PACKAGING:	BULK 40873-0056

CKTS	MATERIAL NUMBER	ENG NUMBER	CKTS	MATERIAL NUMBER	ENG NUMBER
02	22-28-1022	A-42228-0072	20	22-28-1202	A-42228-0090
03	22-28-1032	A-42228-0073	21	22-28-1212	A-42228-0091
04	22-28-1042	A-42228-0074	22	22-28-1222	A-42228-0092
05	22-28-1052	A-42228-0075	23	22-28-1232	A-42228-0093
06	22-28-1062	A-42228-0076	24	22-28-1242	A-42228-0094
07	22-28-1072	A-42228-0077	25	22-28-1252	A-42228-0095
08	22-28-1082	A-42228-0078	26	22-28-1262	A-42228-0096
09	22-28-1092	A-42228-0079	27	22-28-1272	A-42228-0097
10	22-28-1102	A-42228-0080	28	22-28-1282	A-42228-0098
11	22-28-1112	A-42228-0081	29	22-28-1292	A-42228-0099
12	22-28-1122	A-42228-0082	30	22-28-1302	A-42228-0100
13	22-28-1132	A-42228-0083	31	22-28-1312	A-42228-0101
14	22-28-1142	A-42228-0084	32	22-28-1322	A-42228-0102
15	22-28-1152	A-42228-0085	33	22-28-1332	A-42228-0103
16	22-28-1162	A-42228-0086	34	22-28-1342	A-42228-0104
17	22-28-1172	A-42228-0087	35	22-28-1352	A-42228-0105
18	22-28-1182	A-42228-0088	36	22-28-1362	A-42228-0106
19	22-28-1192	A-42228-0089			

A-42228-0107/0141	
HEADER NUMBER:	41411
PIN NUMBER:	42663-CNA154
PIN LENGTH: L	.720/18.29
MATING LENGTH: M	.295/7.49
GOLD POINT: G	N/A
PC TAIL LENGTH: P	.135/3.43
TIN: T	OVERALL
DIMENSION Y	.022/0.56
CKTS:	2-36
KINKS:	YES ES-42003
REMOVED BACKWALLS:	NO
VOIDED CKTS:	NONE
PACKAGING:	BULK 40873-0056

CKTS	MATERIAL NUMBER	ENG NUMBER	CKTS	MATERIAL NUMBER	ENG NUMBER
02	22-28-1023	A-42228-0107	20	22-28-1203	A-42228-0125
03	22-28-1033	A-42228-0108	21	22-28-1213	A-42228-0126
04	22-28-1043	A-42228-0109	22	22-28-1223	A-42228-0127
05	22-28-1053	A-42228-0110	23	22-28-2233	A-42228-0128
06	22-28-1063	A-42228-0111	24	22-28-1243	A-42228-0129
07	22-28-1073	A-42228-0112	25	22-28-1253	A-42228-0130
08	22-28-1083	A-42228-0113	26	22-28-1263	A-42228-0131
09	22-28-1093	A-42228-0114	27	22-28-1273	A-42228-0132
10	22-28-1103	A-42228-0115	28	22-28-1283	A-42228-0133
11	22-28-1113	A-42228-0116	29	22-28-1293	A-42228-0134
12	22-28-1123	A-42228-0117	30	22-28-1303	A-42228-0135
13	22-28-1133	A-42228-0118	31	22-28-1313	A-42228-0136
14	22-28-1143	A-42228-0119	32	22-28-1323	A-42228-0137
15	22-28-1153	A-42228-0120	33	22-28-1333	A-42228-0138
16	22-28-1163	A-42228-0121	34	22-28-1343	A-42228-0139
17	22-28-1173	A-42228-0122	35	22-28-1353	A-42228-0140
18	22-28-1183	A-42228-0123	36	22-28-1363	A-42228-0141
19	22-28-1193	A-42228-0124			

REV:		TITLE:	SHEET No.
L		.100 FRICTION LOCK BREAKAWAY HEADER ASSY.	**- 3 -**

DOCUMENT NUMBER:	CREATED / REVISED BY:	CHECKED BY:	APPROVED BY:
SD- 42228 -001	**S. LINEHAN 03/04/2004**	**K.SAMIEC 03/04/2004**	**Y. MARGULIS 03/04/2004**

A-42228-0142/0176	
HEADER NUMBER:	41411
PIN NUMBER:	42663-CNB208
PIN LENGTH: L	.720/18.29
MATING LENGTH: M	.295/7.49
GOLD POINT: G	.140/3.56
PC TAIL LENGTH: P	.135/3.43
TIN: T	.135/3.43
DIMENSION Y	.022/0.56
CKTS:	2-36
KINKS:	YES ES-42003
REMOVED BACKWALLS:	NO
VOIDED CKTS:	NONE
PACKAGING:	BULK 40873-0056

CKTS	MATERIAL NUMBER	ENG NUMBER	CKTS	MATERIAL NUMBER	ENG NUMBER
02	22-28-1024	A-42228-0142	20	22-28-1204	A-42228-0160
03	22-28-1034	A-42228-0143	21	22-28-1214	A-42228-0161
04	22-28-1044	A-42228-0144	22	22-28-1224	A-42228-0162
05	22-28-1054	A-42228-0145	23	22-28-1234	A-42228-0163
06	22-28-1064	A-42228-0146	24	22-28-1244	A-42228-0164
07	22-28-1074	A-42228-0147	25	22-28-1254	A-42228-0165
08	22-28-1084	A-42228-0148	26	22-28-1264	A-42228-0166
09	22-28-1094	A-42228-0149	27	22-28-1274	A-42228-0167
10	22-28-1104	A-42228-0150	28	22-28-1284	A-42228-0168
11	22-28-1114	A-42228-0151	29	22-28-1294	A-42228-0169
12	22-28-1124	A-42228-0152	30	22-28-1304	A-42228-0170
13	22-28-1134	A-42228-0153	31	22-28-1314	A-42228-0171
14	22-28-1144	A-42228-0154	32	22-28-1324	A-42228-0172
15	22-28-1154	A-42228-0155	33	22-28-1334	A-42228-0173
16	22-28-1164	A-42228-0156	34	22-28-1344	A-42228-0174
17	22-28-1174	A-42228-0157	35	22-28-1354	A-42228-0175
18	22-28-1184	A-42228-0158	36	22-28-1364	A-42228-0176
19	22-28-1194	A-42228-0159			

A-42228-0177/0211	
HEADER NUMBER:	41411
PIN NUMBER:	42663-CNB228
PIN LENGTH: L	.720/18.29
MATING LENGTH: M	.295/7.49
GOLD POINT: G	.140/3.56
PC TAIL LENGTH: P	.135/3.43
TIN: T	.135/3.43
DIMENSION Y	.022/0.56
CKTS:	2-36
KINKS:	YES ES-42003
REMOVED BACKWALLS:	NO
VOIDED CKTS:	NONE
PACKAGING:	BULK 40873-0056

CKTS	MATERIAL NUMBER	ENG NUMBER	CKTS	MATERIAL NUMBER	ENG NUMBER
02	22-28-1025	A-42228-0177	20	22-28-1205	A-42228-0195
03	22-28-1035	A-42228-0178	21	22-28-1215	A-42228-0196
04	22-28-1045	A-42228-0179	22	22-28-1225	A-42228-0197
05	22-28-1055	A-42228-0180	23	22-28-2235	A-42228-0198
06	22-28-1065	A-42228-0181	24	22-28-1245	A-42228-0199
07	22-28-1075	A-42228-0182	25	22-28-1255	A-42228-0200
08	22-28-1085	A-42228-0183	26	22-28-1265	A-42228-0201
09	22-28-1095	A-42228-0184	27	22-28-1275	A-42228-0202
10	22-28-1105	A-42228-0185	28	22-28-1285	A-42228-0203
11	22-28-1115	A-42228-0186	29	22-28-1295	A-42228-0204
12	22-28-1125	A-42228-0187	30	22-28-1305	A-42228-0205
13	22-28-1135	A-42228-0188	31	22-28-1315	A-42228-0206
14	22-28-1145	A-42228-0189	32	22-28-1325	A-42228-0207
15	22-28-1155	A-42228-0190	33	22-28-1335	A-42228-0208
16	22-28-1165	A-42228-0191	34	22-28-1345	A-42228-0209
17	22-28-1175	A-42228-0192	35	22-28-1355	A-42228-0210
18	22-28-1185	A-42228-0193	36	22-28-1365	A-42228-0211
19	22-28-1195	A-42228-0194			

REV:		TITLE:	SHEET No.
L		.100 FRICTION LOCK BREAKAWAY HEADER ASSY.	**- 4 -**

DOCUMENT NUMBER:	CREATED / REVISED BY:	CHECKED BY:	APPROVED BY:
SD- 42228 -001	**S. LINEHAN 03/04/2004**	**K.SAMIEC 03/04/2004**	**Y. MARGULIS 03/04/2004**

CKTS	DIM A	DIM B
2	.200/5.08	.100/2.54
3	.300/7.62	.200/5.08
4	.400/10.16	.300/7.62
5	.500/12.70	.400/10.16
6	.600/15.24	.500/12.70
7	.700/17.78	.600/15.24
8	.800/20.32	.700/17.78
9	.900/22.86	.800/20.32
10	1.000/25.40	.900/22.86
11	1.100/27.94	1.000/25.40
12	1.200/30.48	1.100/27.94
13	1.300/33.02	1.200/30.48
14	1.400/35.56	1.300/33.02
15	1.500/38.10	1.400/35.56
16	1.600/40.64	1.500/38.10
17	1.700/43.18	1.600/40.64
18	1.800/45.72	1.700/43.18
19	1.900/48.26	1.800/45.72
20	2.000/50.80	1.900/48.26
21	2.100/53.34	2.000/50.80
22	2.200/55.88	2.100/53.34
23	2.300/58.42	2.200/55.88
24	2.400/60.96	2.300/58.42
25	2.500/63.50	2.400/60.96
26	2.600/66.04	2.500/63.50
27	2.700/68.58	2.600/66.04
28	2.800/71.12	2.700/68.58
29	2.900/73.66	2.800/71.12
30	3.000/76.20	2.900/73.66
31	3.100/78.74	3.000/76.20
32	3.200/81.28	3.100/78.74
33	3.300/83.82	3.200/81.28
34	3.400/86.36	3.300/83.82
35	3.500/88.90	3.400/86.36
36	3.600/91.44	3.500/88.90

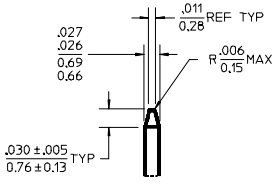

DETAIL X
SCALE 5:1

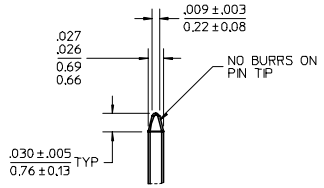

DETAIL Y
SCALE 5:1

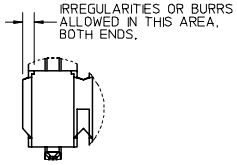

DETAIL Z
SCALE 5:1

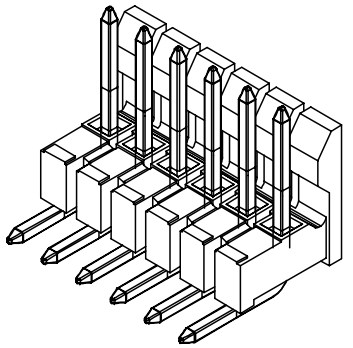

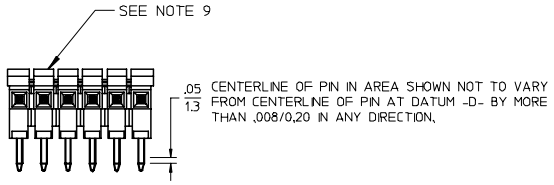

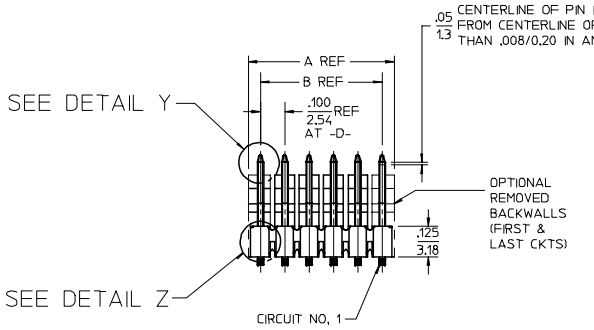

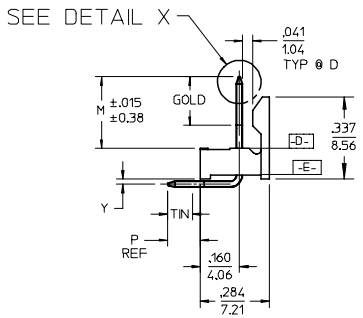

NOTES:
1. MATERIAL:GLASS FILLED NYLON, 94V-0, COLOR: BLACK
2. FINISH:
   (154) *OVERALL TIN: .000100/0.00254 MIN.
   OVER .000050/0.00127 MIN NICKEL.
   (208) SELECT GOLD: .000015/0.00038 MIN.
   *SELECT TIN: .000100/0.00254 MIN.
   OVERALL NICKEL UNDERPLATE: .000050/0.00127 MIN.
   (228) SELECT GOLD: .000030/0.00076 MIN.
   *SELECT TIN: .000100/0.00254 MIN.
   OVERALL NICKEL UNDERPLATE: .000050/0.00127 MIN.
   *THE PRIMARY SHIPPING CARTON WILL BE LABELED "COMPLIANT TO RoHS DIRECTIVE 2002/95/EC AND ELV ANNEX II OF DIRECTIVE 2000/53/EC". CARTONS WITHOUT THIS LABEL MAY CONTAIN PRODUCT WITH TIN-LEAD PLATING
3. PRODUCT SPECIFICATION: PS-10-07.
4. PACKAGING INFORMATION: SEE TABLES
5. KINK PIN SPECIFICATION: SEE SMES-42003
6. HEADERS ARE NOT STACKABLE ON .100/2.54 CENTERS.
7. SOLDERABILITY PER SMES-152.
8. PIN PUSH OUT FORCE: 3 LBS. MIN.
9. ABRASION MARKS ON BACK WALL SURFACE ARE PERMISSIBLE.

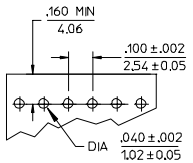

RECOMMENDED PC BOARD LAYOUT

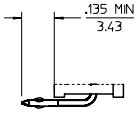

KINKED PIN DETAIL
SEE NOTE 5

REV	DESCRIPTION	
L4	ADD NOTE 9	2006/02/01
	EC NO: UCP2006-1710	2006/02/02
	DRWN:ADERR	2006/02/06
	CH'KD:LSCHMIDT	
	APPR:FSMITH	

QUALITY SYMBOLS
▼=0
▽=0

GENERAL TOLERANCES (UNLESS SPECIFIED)

	mm	INCH
4 PLACES	± ---	± ---
3 PLACES	± ---	± .010
2 PLACES	± 0.25	± .014
1 PLACE	± 0.36	± ---
ANGULAR ±1/2°		

DRAFT WHERE APPLICABLE MUST REMAIN WITHIN DIMENSIONS

DIMENSION STYLE: IN/MM
SCALE: 2:1
DESIGN UNITS: INCH
THIRD ANGLE PROJECTION

DRAWN BY	JSCHAFER
DATE	2004/03/18
CHECKED BY	KSAMIEC
DATE	2004/03/18
APPROVED BY	MARGULIS
DATE	2004/03/18

TITLE: .100 FRICTION LOCK BREAKAWAY HEADER ASSY

MOLEX INCORPORATED

MATERIAL NO.: SEE CHART
DOCUMENT NO.: SD-42228-002
SHEET NO.: 1 OF 6

SIZE: B

THIS DRAWING CONTAINS INFORMATION THAT IS PROPRIETARY TO MOLEX INCORPORATED AND SHOULD NOT BE USED WITHOUT WRITTEN PERMISSION

2-*	L
1	L4
SHT	REV

A-42228-0077	
HEADER NUMBER:	41411
PIN NUMBER:	42663-CKB228
PIN LENGTH: L	.705/17.91
MATING LENGTH: M	.295/7.49
GOLD POINT: G	.140/3.56
PC TAIL LENGTH: P	.120/3.05
TIN: T	.135/3.43
DIMENSION Y	.022/0.56
CKTS:	2-36
KINKS:	NO
REMOVED BACKWALLS:	NO
VOIDED CKTS:	NONE
PACKAGING:	BULK 40873-0056

CKTS	MATERIAL NUMBER	ENG NUMBER	CKTS	MATERIAL NUMBER	ENG NUMBER
02			20		
03			21		
04			22		
05			23		
06			24		
07	50-29-1881	A-42228-0077	25		
08			26		
09			27		
10			28		
11			29		
12			30		
13			31		
14			32		
15			33		
16			34		
17			35		
18			36		
19					

A-42228-0144	
HEADER NUMBER:	41411
PIN NUMBER:	42663-CNB208
PIN LENGTH: L	.720/18.29
MATING LENGTH: M	.295/7.49
GOLD POINT: G	.140/3.56
PC TAIL LENGTH: P	.135/3.43
TIN: T	.135/3.43
DIMENSION Y	.022/0.56
CKTS:	2-36
KINKS:	YES ES-42003
REMOVED BACKWALLS:	NO
VOIDED CKTS:	NONE
PACKAGING:	BULK 40873-0056

CKTS	MATERIAL NUMBER	ENG NUMBER	CKTS	MATERIAL NUMBER	ENG NUMBER
02			20		
03			21		
04	50-29-1739	A-42228-0144	22		
05			23		
06			24		
07			25		
08			26		
09			27		
10			28		
11			29		
12			30		
13			31		
14			32		
15			33		
16			34		
17			35		
18			36		
19					

REV:		TITLE:	SHEET No.
A2		.100 FRICTION LOCK BREAKAWAY HEADER ASSY. LEAD-FREE	**- 2 -**

DOCUMENT NUMBER:	CREATED / REVISED BY:	CHECKED BY:	APPROVED BY:
SD- 42228 -003	**DPETERSON 09/26/2005**	**ADERR 09/26/2005**	**FSMITH 09/26/2005**