molex
one company > a world of innovation

This document was generated on 05/24/2010

PLEASE CHECK WWW.MOLEX.COM FOR LATEST PART INFORMATION

Part Number: 0022057168
Status: Active
Overview: kk
Description: 2.54mm (.100") Pitch KK® Wire-to-Board Header, Right Angle, with Friction Lock, 16 Circuits

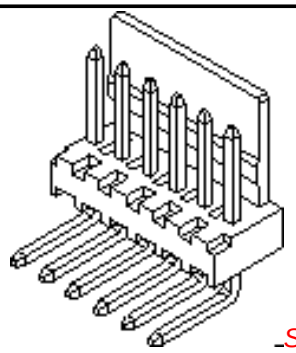

Series image - Reference only

Documents:

3D Model
Drawing (PDF)
Product Specification PS-10-07 (PDF)
Product Specification PS-99020-0088 (PDF)
RoHS Certificate of Compliance (PDF)

Agency Certification

CSA	LR19980
UL	E29179

General

Product Family	PCB Headers
Series	7395
Application	Wire-to-Board
Overview	kk
Product Name	KK®

Physical

Breakaway	No
Circuits (Loaded)	16
Circuits (maximum)	16
Color - Resin	Natural (White)
Durability (mating cycles max)	25
First Mate / Last Break	No
Flammability	94V-0
Glow-Wire Compliant	No
Guide to Mating Part	No
Keying to Mating Part	None
Lock to Mating Part	Yes
Material - Metal	Brass
Material - Plating Mating	Tin
Material - Plating Termination	Tin
Material - Resin	Nylon
Number of Rows	1
Orientation	Right Angle
PC Tail Length (in)	0.150 In
PC Tail Length (mm)	3.80 mm
PCB Locator	No
PCB Retention	None
Packaging Type	Bag
Pitch - Mating Interface (in)	0.100 In
Pitch - Mating Interface (mm)	2.54 mm
Pitch - Term. Interface (in)	0.100 In
Pitch - Term. Interface (mm)	2.54 mm
Plating min: Mating (µin)	200
Plating min: Mating (µm)	5
Plating min: Termination (µin)	200
Plating min: Termination (µm)	5
Polarized to Mating Part	Yes
Polarized to PCB	No
Shrouded	No

EU RoHS
ELV and RoHS Compliant
REACH SVHC
Not Reviewed
Halogen-Free Status
Halogen-Free

China RoHS

Need more information on product environmental compliance?

Email productcompliance@molex.com
For a multiple part number RoHS Certificate of Compliance, click here

Please visit the Contact Us section for any non-product compliance questions.

Search Parts in this Series
7395Series

Mates With
2695 KK® Crimp Terminal Housing. 6471 KK® Crimp Terminal Housing. 7720 KK® IDT Double Cantilever

Stackable	No
Surface Mount Compatible (SMC)	No
Temperature Range - Operating	-40°C to +105°C
Termination Interface: Style	Through Hole

Electrical

Current - Maximum per Contact	4A
Voltage - Maximum	250V

Solder Process Data

Lead-free Process Capability	Wave Capable (TH only)

Material Info

Old Part Number	739516B

Reference - Drawing Numbers

Packaging Specification	PK-7478-001
Product Specification	PS-10-07, PS-99020-0088
Sales Drawing	SD-7395-001

This document was generated on 05/24/2010

PLEASE CHECK WWW.MOLEX.COM FOR LATEST PART INFORMATION

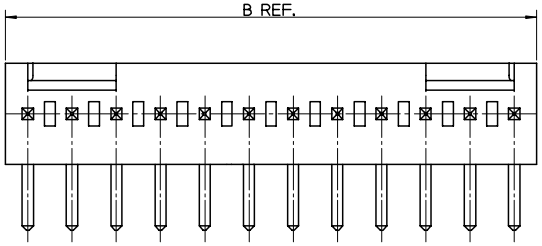

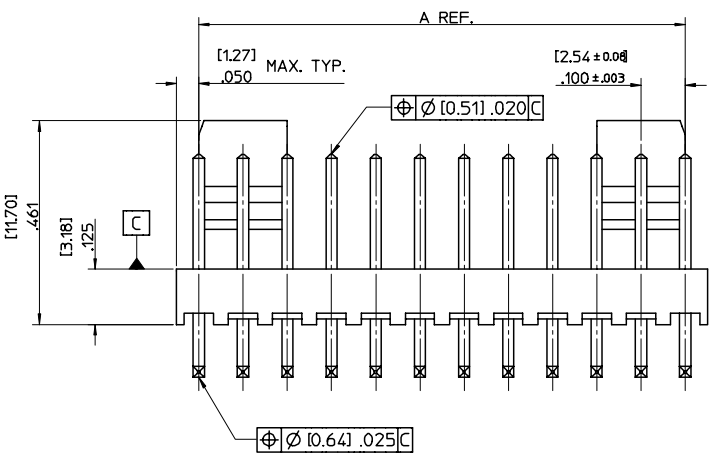

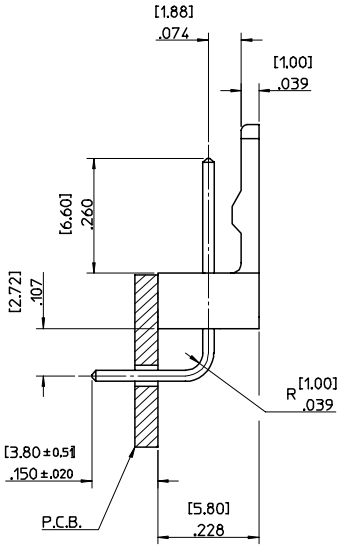

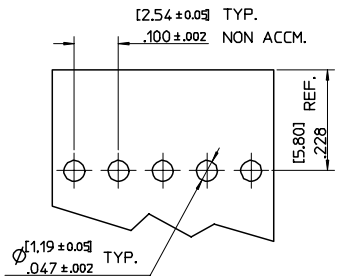

RECOMENDED P.C.B. BOARD

NO. OF CCTS	DIM. A	DIM. B	PIN FINISH: [0.005]/0.0002 MIN. TIN OVER [0.003]/0.0001 MIN. COPPER ENG. NO.	PIN FINISH: [0.005]/0.0002 MIN. TIN OVER [0.003]/0.0001 MIN. COPPER PART NO.	PIN FINISH: [0.0005]/0.00002 MIN. GOLD OVER [0.0008]/0.00003 MIN. NICKEL ENG. NO.	PIN FINISH: [0.0005]/0.00002 MIN. GOLD OVER [0.0008]/0.00003 MIN. NICKEL PART NO.
2	2.54/.100	5.08/.200	AE-7395-2B	22-05-7028	AE-7395-2BG	22-12-4022
3	5.08/.200	7.62/.300	AE-7395-3B	22-05-7038	AE-7395-3BG	22-12-4032
4	7.62/.300	10.16/.400	AE-7395-4B	22-05-7048	AE-7395-4BG	22-12-4042
5	10.16/.400	12.70/.500	AE-7395-5B	22-05-7058	AE-7395-5BG	22-12-4052
6	12.70/.500	15.24/.600	AE-7395-6B	22-05-7068	AE-7395-6BG	22-12-4062
7	15.24/.600	17.78/.700	AE-7395-7B	22-05-7078	AE-7395-7BG	22-12-4072
8	17.78/.700	20.32/.800	AE-7395-8B	22-05-7088	AE-7395-8BG	22-12-4082
9	20.32/.800	22.86/.900	AE-7395-9B	22-05-7098	AE-7395-9BG	22-12-4092
10	22.86/.900	25.40/1.000	AE-7395-10B	22-05-7108	AE-7395-10BG	22-12-4102
11	25.40/1.000	27.94/1.100	AE-7395-11B	22-05-7118	AE-7395-11BG	22-12-4112
12	27.94/1.100	30.48/1.200	AE-7395-12B	22-05-7128	AE-7395-12BG	22-12-4122
13	30.48/1.200	33.02/1.300	AE-7395-13B	22-05-7138	AE-7395-13BG	22-12-4132
14	33.02/1.300	35.56/1.400	AE-7395-14B	22-05-7148	AE-7395-14BG	22-12-4142
15	35.56/1.400	38.10/1.500	AE-7395-15B	22-05-7158	AE-7395-15BG	22-12-4152
16	38.10/1.500	40.64/1.600	AE-7395-16B	22-05-7168	AE-7395-16BG	22-12-4162
17	40.64/1.600	43.18/1.700	AE-7395-17B	22-05-7178	AE-7395-17BG	22-12-4172
18	43.18/1.700	45.72/1.800	AE-7395-18B	22-05-7188	AE-7395-18BG	22-12-4182
19	45.72/1.800	48.26/1.900	AE-7395-19B	22-05-7198	AE-7395-19BG	22-12-4192
20	48.26/1.900	50.80/2.000	AE-7395-20B	22-05-7208	AE-7395-20BG	22-12-4202

NOTES:-
1. MATERIALS:
   WAFER: NYLON 6/6, UL 94, V-0, NATURAL COLOUR
   PIN: [0.64]/0.25 SQUARE HARD DRAWN BRASS
   FINISH: SEE CHART
2. PIN SOLDERABILITY PER MOLEX SPECIFICATION NUMBER 152
3. PIN PUSH OUT FORCE [0.907 KG]/2.0 LBS MIN.
4. PARTS TO BE FLAT WITHIN [0.13]/.005 IN/IN
5. WAFERS STACKABLE END TO END

AE-7395-N B _

NO. OF CCTS.

WAFER ASSY. OPTION

PLATING TYPE
BLANK: TIN
G: GOLD

ORIGINAL RELEASE
EC NO: E2005-1071 2005/06/20
DRWN: JDENNEHY 2005/06/20
CH'KD: GMCSWEENEY 2005/07/07
APPR: JDENNEHY DESCRIPTION
A REV

QUALITY SYMBOLS
▼=0
▽=0

GENERAL TOLERANCES (UNLESS SPECIFIED)

	mm	INCH
4 PLACES	± ---	± ---
3 PLACES	± ---	± .010
2 PLACES	± 0.25	± .015
1 PLACE	± 0.38	± ---

ANGULAR ± 2 °

DRAFT WHERE APPLICABLE MUST REMAIN WITHIN DIMENSIONS

DIMENSION STYLE: MM ONLY
SCALE: 5:1
DESIGN UNITS: METRIC
THIRD ANGLE PROJECTION

DRAWN BY: JDENNEHY DATE: 2005/05/13
CHECKED BY: GMCSWEENEY DATE: 2005/05/27
APPROVED BY: JDENNEHY DATE: 2005/05/27

TITLE: WAFER, R/A FRICTION LOCK (2.54)/.100 CENTERS (0.64)/.025 SQ. PIN

MOLEX INCORPORATED

MATERIAL NO.: SEE CHART
DOCUMENT NO.: SD-7395-001
SHEET NO.: 1 OF 1
SIZE: A2

THIS DRAWING CONTAINS INFORMATION THAT IS PROPRIETARY TO MOLEX INCORPORATED AND SHOULD NOT BE USED WITHOUT WRITTEN PERMISSION