This document was generated on 10/23/2017

PLEASE CHECK WWW.MOLEX.COM FOR LATEST PART INFORMATION

Part Number: 0022035035
Status: Active
Overview: SPOX Connector System
Description: 2.50mm Pitch SPOX Wire-to-Board Header, Vertical, Shrouded, 3 Circuits, Tin (Sn) Plating

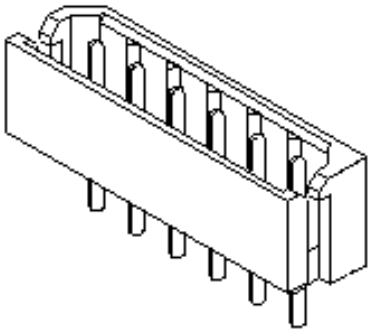

Series image - Reference only

Documents:

3D Model
Drawing (PDF)
Product Specification PS-5264-001-001 (PDF)
Packaging Specification SPK-5267-001-001 (PDF)
RoHS Certificate of Compliance (PDF)

Agency Certification

CSA	LR19980
UL	E29179

General

Product Family	PCB Headers
Series	5267
Application	Signal, Wire-to-Board
MolexKits	Yes
Overview	SPOX Connector System
Product Name	SPOX
UPC	800753625730

Physical

Breakaway	No
Circuits (Loaded)	3
Circuits (maximum)	3
Color - Resin	Natural
Durability (mating cycles max)	30
First Mate / Last Break	No
Flammability	94V-0
Glow-Wire Compliant	No
Guide to Mating Part	No
Keying to Mating Part	None
Lock to Mating Part	Yes
Material - Plating Mating	Tin
Material - Plating Termination	Tin
Material - Resin	Nylon
Net Weight	293.200/mg
Number of Rows	1
Orientation	Vertical
PC Tail Length	3.50mm
PCB Locator	No
PCB Retention	Yes
PCB Thickness - Recommended	1.60mm
Packaging Type	Bag
Pitch - Mating Interface	2.50mm
Plating min - Mating	4.064µm
Plating min - Termination	4.064µm
Polarized to Mating Part	Yes
Polarized to PCB	No
Shrouded	Fully
Stackable	No
Surface Mount Compatible (SMC)	No
Temperature Range - Operating	-40°C to +105°C
Termination Interface: Style	Through Hole

EU ELV
Not Relevant

EU RoHS
Compliant

China RoHS

REACH SVHC
Not Contained Per - ED/30/2017 (7 July 2017)

Halogen-Free Status
Not Low-Halogen

Need more information on product environmental compliance?

Email productcompliance@molex.com
Please visit the Contact Us section for any non-product compliance questions.

China ROHS	Green Image
ELV	Not Relevant
RoHS Phthalates	Not Contained

Search Parts in this Series
5267 Series

Mates With
5264 SPOX Wire-to-Board Crimp Housing,
42219 SPOX IDT Receptacle Housing

Electrical	
Current - Maximum per Contact	3.0A
Voltage - Maximum	250V
Material Info	
Engineering Number	5267-03A
Reference - Drawing Numbers	
Packaging Specification	SPK-5267-001-001
Product Specification	PS-5264-001-001
Sales Drawing	SD-5267-NA

This document was generated on 10/23/2017

PLEASE CHECK WWW.MOLEX.COM FOR LATEST PART INFORMATION