This document was generated on 05/18/2010

PLEASE CHECK WWW.MOLEX.COM FOR LATEST PART INFORMATION

Part Number: 0022011092
Status: Active
Overview: kk
Description: 2.50mm (.098") Pitch KK® Wire-to-Board Housing, Female, Friction Lock, for 2759/5159 Crimp Terminals, 9 Circuits

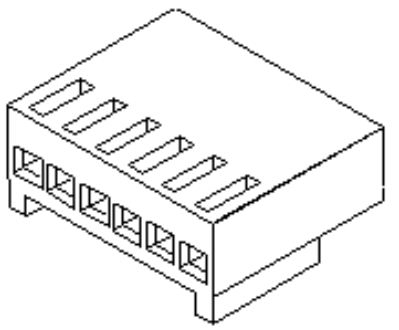

Series image - Reference only

Documents:

3D Model
Drawing (PDF)
Product Specification PS-5045-001 (PDF)
Product Specification PS-5045-002 (PDF)
Product Specification PS-5045-003 (PDF)
Product Specification PS-5045-004 (PDF)
Product Specification PS-5046-004 (PDF)
Product Specification PS-5051-001 (PDF)
Product Specification PS-5051-002 (PDF)
Product Specification PS-5051-003 (PDF)
Product Specification PS-5051-004 (PDF)
Product Specification PS-5102-004 (PDF)
RoHS Certificate of Compliance (PDF)

Agency Certification

CSA	LR19980
TUV	R72090224
UL	E29179

General

Product Family	Crimp Housings
Series	5051
Overview	kk
Product Name	KK®

Physical

Circuits (maximum)	9
Color - Resin	Natural
Flammability	94V-0
Gender	Female
Glow-Wire Compliant	No
Material - Resin	Nylon
Number of Rows	1
Packaging Type	Bag
Panel Mount	No
Pitch - Mating Interface (in)	0.098 In
Pitch - Mating Interface (mm)	2.50 mm
Stackable	No
Temperature Range - Operating	-40°C to +105°C

Material Info

Old Part Number	5051-09

Reference - Drawing Numbers

Packaging Specification	SPK-5051-001
Product Specification	PS-5045-001, PS-5045-002, PS-5045-003, PS-5045-004, PS-5046-004, PS-5051-001, PS-5051-002, PS-5051-003, PS-5051-004, PS-5102-004
Sales Drawing	SD-5051-001

EU RoHS
ELV and RoHS Compliant
REACH SVHC
Contains SVHC: No
Halogen-Free Status
Not Halogen-Free

China RoHS

Need more information on product environmental compliance?

Email productcompliance@molex.com
For a multiple part number RoHS Certificate of Compliance, click here

Please visit the Contact Us section for any non-product compliance questions.

Search Parts in this Series
5051Series

Mates With
5045 Vertical Header, 5046 Right Angle Header

Use With
2759 , 5159

This document was generated on 05/18/2010

PLEASE CHECK WWW.MOLEX.COM FOR LATEST PART INFORMATION

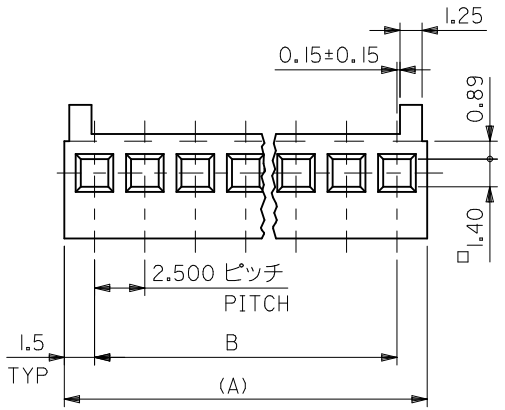

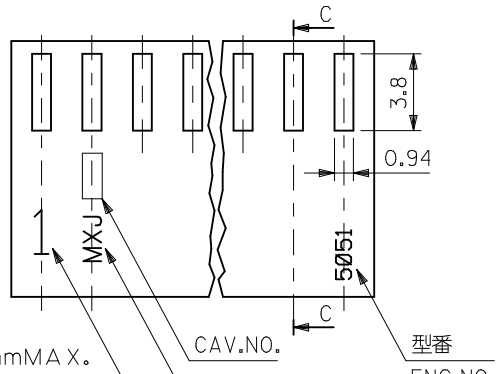

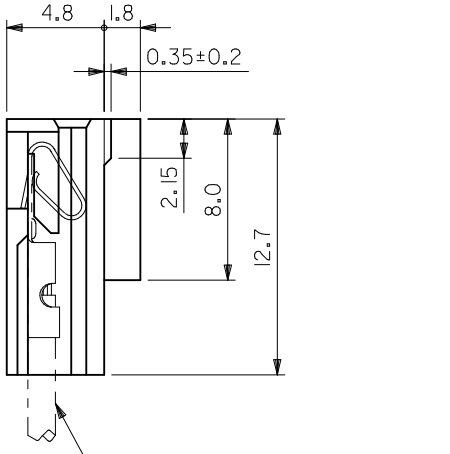

注)
NOTE.

1. そりは長さ25。4mmに対して0。2mmMAX。
   CAMBER MUST BE WITHIN 0.2 MAX. PER 25.4.
2. (　) 寸法は参考値
   DIMENSION SHOWN IN ( ) ARE REFERENCE.
3. サーキットNO。1のみ表示　但し2極の場合は
   MX－Jマーク側が1となる
   WHEN 2 CIRCUITS HOUSING TRADE MARK SIDE IN NO.1 CIRCUIT.

MT'L. NYLON 66(94V-0)

5051-16	22-01-1162	16	37.50±0.25	40.50
-15	-1152	15	35.00±0.20	38.00
-14	-1142	14	32.50±0.20	35.50
-13	-1132	13	30.00±0.20	33.00
-12	-1122	12	27.50±0.20	30.50
-11	-1112	11	25.00±0.15	28.00
-10	-1102	10	22.50±0.15	25.50
-09	-1092	9	20.00±0.15	23.00
-08	-1082	8	17.50±0.15	20.50
-07	-1072	7	15.00±0.15	18.00
-06	-1062	6	12.50±0.10	15.50
-05	-1052	5	10.00±0.10	13.00
-04	-1042	4	7.50±0.10	10.50
-03	-1032	3	5.00±0.10	8.00
5051-02	22-01-1022	2	2.50±0.08	5.50
MATERIAL NO.	PART NO.	極数 N	B	(A)

MODEL NO. 5051-N

REVISED
EC NO: J2010-1867 2010/03/19
DRWN:RTSURUOKA 2010/03/23
CH'KD:THARUYAMA 2010/03/23
APPR:HHIRATA 2010/03/23
DESCRIPTION
REV

GENERAL TOLERANCES (UNLESS SPECIFIED)

10 UNDER	±0.25
10 OVER 30 UNDER	±0.3
30 OVER	±0.35
ANGULAR	±3 °

DRAFT WHERE APPLICABLE MUST REMAIN WITHIN DIMENSIONS

DIMENSION STYLE: MM ONLY
SCALE: 4:1
DESIGN UNITS: METRIC
THIRD ANGLE PROJECTION

DRAWN BY: K.KOHAMA DATE: '00/3/28
CHECKED BY: T.YAMAGUCHI DATE: '00/3/30
APPROVED BY: M.FUKUSHIMA DATE: '00/3/30

TITLE: 2.50/(.098) CENTERS KK POLZG HSG

MOLEX INCORPORATED

MATERIAL NO.: SEE TABLE
DOCUMENT NO.: SD-5051-001
SHEET NO.: 1 OF 1

SIZE A3

THIS DRAWING CONTAINS INFORMATION THAT IS PROPRIETARY TO MOLEX INCORPORATED AND SHOULD NOT BE USED WITHOUT WRITTEN PERMISSION