This document was generated on 05/31/2010

# PLEASE CHECK WWW.MOLEX.COM FOR LATEST PART INFORMATION

**Part Number:** 0015453110
**Status:** Active
**Overview:** cgrid__sl_products
**Description:** 2.54mm (.100") Pitch C-Grid® PCB Connector, Surface Mount, High Profile, Dual Row, Vertical, 10 Circuits

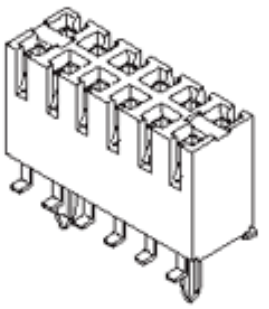

*Series image - Reference only*

**Documents:**

- 3D Model
- Drawing (PDF)
- Product Specification PS-71395 (PDF)
- RoHS Certificate of Compliance (PDF)

## Agency Certification

| | |
|---|---|
| CSA | E29179 |
| UL | E29179 |

## General

| | |
|---|---|
| Product Family | PCB Receptacles |
| Series | 71395 |
| Application | Board-to-Board |
| Overview | cgrid__sl_products |
| Product Name | C-Grid® |

## Physical

| | |
|---|---|
| Circuits (Loaded) | 10 |
| Color - Resin | Black |
| Durability (mating cycles max) | 50 |
| Flammability | 94V-0 |
| Glow-Wire Compliant | No |
| Guide to Mating Part | No |
| Keying to Mating Part | None |
| Lock to Mating Part | No |
| Material - Metal | Phosphor Bronze |
| Material - Plating Mating | Gold |
| Material - Plating Termination | Tin |
| Material - Resin | High Temperature Thermoplastic |
| Number of Rows | 2 |
| Orientation | Vertical |
| PC Tail Length (in) | 0.058 In |
| PC Tail Length (mm) | 1.47 mm |
| PCB Locator | Yes |
| PCB Retention | None |
| Packaging Type | Tray |
| Pitch - Mating Interface (in) | 0.100 In |
| Pitch - Mating Interface (mm) | 2.54 mm |
| Plating min: Mating (µin) | 15 |
| Plating min: Mating (µm) | 0.375 |
| Plating min: Termination (µin) | 75 |
| Plating min: Termination (µm) | 1.875 |
| Polarized to PCB | No |
| Surface Mount Compatible (SMC) | N/A |
| Temperature Range - Operating | -40°C to +105°C |
| Termination Interface: Style | Surface Mount |

## Electrical

| | |
|---|---|
| Current - Maximum per Contact | 2.5A |
| Grounding to PCB | No |
| Voltage - Maximum | 250V |

**EU RoHS**
ELV and RoHS Compliant
**REACH SVHC**
Contains SVHC: No
**Halogen-Free Status**
Halogen-Free

**China RoHS**

**Need more information on product environmental compliance?**

Email productcompliance@molex.com
For a multiple part number RoHS Certificate of Compliance, click here

Please visit the Contact Us section for any non-product compliance questions.

**Search Parts in this Series**
71395Series

**Mates With**
8624 C-Grid® Breakaway Header, 70246 Straight Header, 70247 Right Angle Header, 70287 C-Grid® Header, 70227 Dual Row C-Grid® Header, 70567 C-Grid® Header, 70280 C-Grid® Breakaway Header, 70524 C-Grid® Breakaway Header, 7

## Solder Process Data

| | |
|---|---|
| Lead-free Process Capability | Reflow Capable (SMT only) |
| Process Temperature max. C | 260 |

## Material Info

| | |
|---|---|
| Old Part Number | A713951110 |

## Reference - Drawing Numbers

| | |
|---|---|
| Application Specification | AS-71395-001 |
| Packaging Specification | PK-70873-0304 |
| Product Specification | PS-71395 |
| Sales Drawing | SDA-71395-1*** |

This document was generated on 05/31/2010

**PLEASE CHECK WWW.MOLEX.COM FOR LATEST PART INFORMATION**

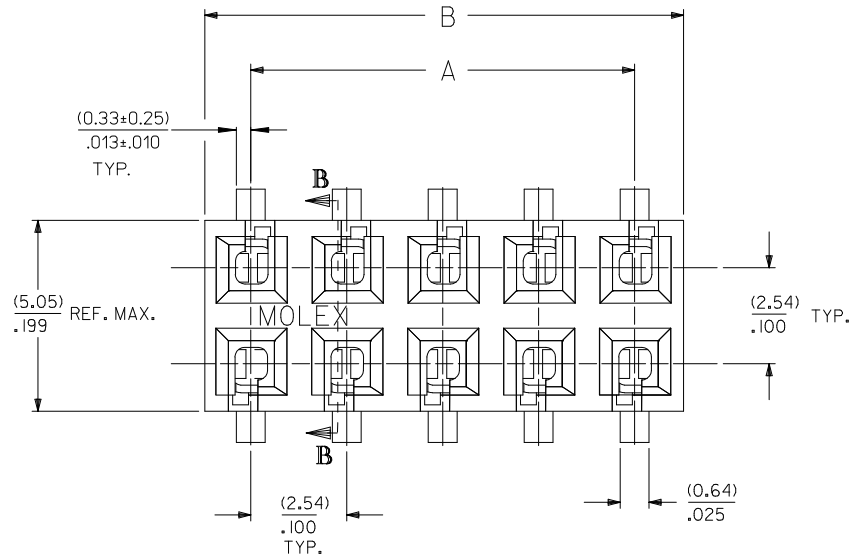


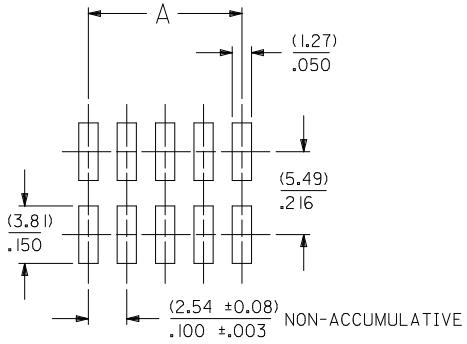


RECOMMENDED P.C. BOARD LAYOUT
SCALE: 4:1

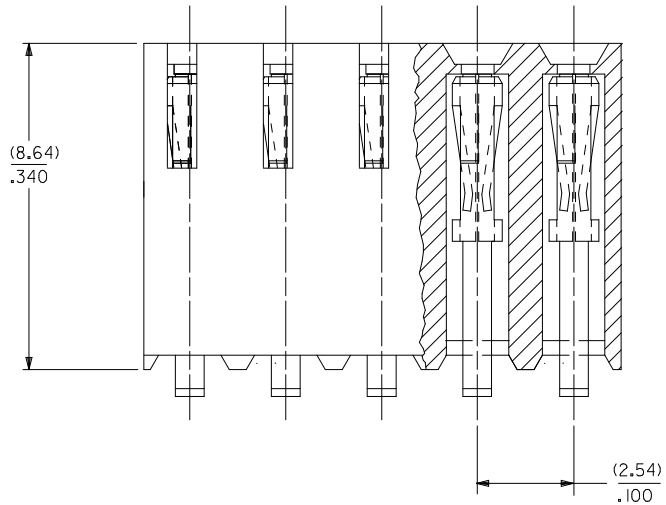


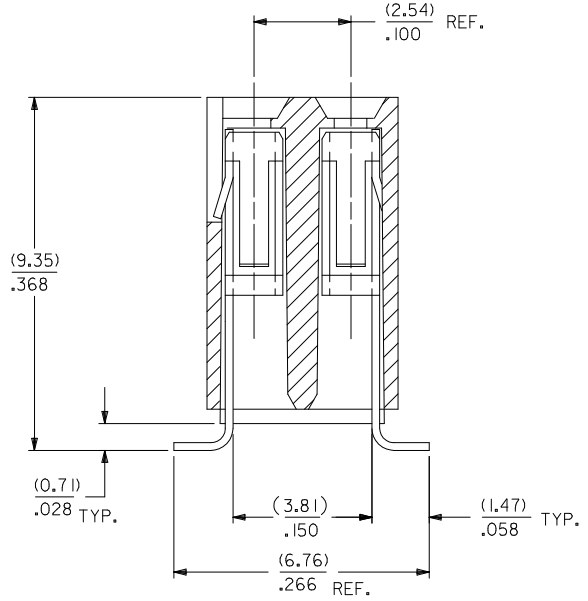


SECTION B-B

- VERSION WITHOUT PCB RETENTION PEGS -

NOTES:

1 - HOUSING MATERIAL: GLASS FILLED LCP (LIQUID CRYSTAL POLYMER), UL 94V-0, COLOR: BLACK.
2 - TERMINAL MATERIAL: (0.20)/.008 PHOSPHOR BRONZE
3 - SEE SHEET 2 FOR CIRCUIT SIZES AND OVER-ALL DIMENSIONS
4 - PART CONFORMS TO PS-71395
5 - PACKAGING:
FOR TRAY PACK SEE PK-70873-0304.
FOR TAPE AND REEL PACK SEE PK-71395-001.
6 - PRODUCT COMPLIES WITH CLASS B OF COSMETIC SPECIFICATION PS-45499-002.

| | |
|---|---|
| ADD 71395-5040 | 2009/10/14 |
| EC NO: UCP2010-1001 | 2009/12/01 |
| DRWN:MS BARRA | 2009/12/01 |
| CH'KD:DMORGAN | |
| APPR:SMILLER | |
| DESCRIPTION | |
| N | REV |

QUALITY SYMBOLS
F =0
F =0
F =0

GENERAL TOLERANCES (UNLESS SPECIFIED)

| | mm | INCH |
|---|---|---|
| 4 PLACES | ± --- | ± --- |
| 3 PLACES | ± --- | ± .010 |
| 2 PLACES | ± 0.25 | ± .014 |
| 1 PLACE | ± 0.35 | ± --- |
| ANGULAR ±1/2° | | |

DRAFT WHERE APPLICABLE MUST REMAIN WITHIN DIMENSIONS

| | |
|---|---|
| DIMENSION STYLE | MM/IN |
| SCALE | |
| DESIGN UNITS | METRIC |
| | THIRD ANGLE PROJECTION |
| DRAWN BY / DATE | |
| CHECKED BY / DATE | RB 1985/12/03 |
| APPROVED BY / DATE | |
| MATERIAL NO. | SEE CHART |
| DOCUMENT NO. | SDA-71395-1*** |
| SHEET NO. | 1 OF 3 |
| SIZE | C |

TITLE: CONNECTOR DUAL ROW VERTICAL SURFACE MOUNT TOP ENTRY ON .100 GRID

molex MOLEX INCORPORATED

THIS DRAWING CONTAINS INFORMATION THAT IS PROPRIETARY TO MOLEX INCORPORATED AND SHOULD NOT BE USED WITHOUT WRITTEN PERMISSION

## - VERSION WITHOUT PCB RETENTION PEGS -

| NO. OF CKTS. | | TIN PLATING | | | 15 GOLD PLATING | | | 30 GOLD PLATING | | | DIM. "A" | | DIM. "B" | | | |
|---|---|---|---|---|---|---|---|---|---|---|---|---|---|---|---|---|
| PER ROW | TOTAL | E.D.P. NO. | ENG. NO. | TRAY PACKAGING | E.D.P. NO. | ENG. NO. | TRAY PACKAGING | E.D.P. NO. | ENG. NO. | TRAY PACKAGING | INCH | MM | INCH | MM | INCH | MM |
| 2 | 4 | NA | AX-71395-1004 | PK-70873-0304 | NA | AX-71395-1104 | PK-70873-0304 | NA | AX-71395-1204 | PK-70873-0304 | .100 | 2,54 | .199 | 5,05 | | |
| 3 | 6 | 71395-1006 | A-71395-1006 | PK-70873-0304 | NA | AX-71395-1106 | PK-70873-0304 | NA | AX-71395-1206 | PK-70873-0304 | .200 | 5,08 | .299 | 7,59 | | |
| 4 | 8 | 15-45-3208 | A-71395-1008 | PK-70873-0304 | 15-45-3108 | A-71395-1108 | PK-70873-0304 | 15-45-3308 | A-71395-1208 | PK-70873-0304 | .300 | 7,62 | .399 | 10,13 | | |
| 5 | 10 | 15-45-3210 | A-71395-1010 | PK-70873-0304 | 15-45-3110 | A-71395-1110 | PK-70873-0304 | 15-45-3310 | A-71395-1210 | PK-70873-0304 | .400 | 10,16 | .499 | 12,67 | | |
| 6 | 12 | 15-45-3212 | A-71395-1012 | PK-70873-0304 | 15-45-3112 | A-71395-1112 | PK-70873-0304 | 15-45-3312 | A-71395-1212 | PK-70873-0304 | .500 | 12,70 | .599 | 15,21 | | |
| 7 | 14 | 15-45-3214 | A-71395-1014 | PK-70873-0304 | 15-45-3114 | A-71395-1114 | PK-70873-0304 | 15-45-3314 | A-71395-1214 | PK-70873-0304 | .600 | 15,24 | .699 | 17,75 | | |
| 8 | 16 | 15-45-3216 | A-71395-1016 | PK-70873-0304 | 15-45-3116 | A-71395-1116 | PK-70873-0304 | 15-45-3316 | A-71395-1216 | PK-70873-0304 | .700 | 17,78 | .799 | 20,29 | | |
| 9 | 18 | 15-45-3218 | A-71395-1018 | PK-70873-0304 | 15-45-3118 | A-71395-1118 | PK-70873-0304 | 15-45-3318 | A-71395-1218 | PK-70873-0304 | .800 | 20,32 | .899 | 22,83 | | |
| 10 | 20 | 15-45-3220 | A-71395-1020 | PK-70873-0304 | 15-45-3120 | A-71395-1120 | PK-70873-0304 | 15-45-3320 | A-71395-1220 | PK-70873-0304 | .900 | 22,86 | .999 | 25,37 | | |
| 11 | 22 | 15-45-3222 | A-71395-1022 | PK-70873-0304 | 15-45-3122 | A-71395-1122 | PK-70873-0304 | 15-45-3322 | A-71395-1222 | PK-70873-0304 | 1.000 | 25,40 | 1.099 | 27,91 | | |
| 12 | 24 | 15-45-3224 | A-71395-1024 | PK-70873-0304 | 15-45-3124 | A-71395-1124 | PK-70873-0304 | 15-45-3324 | A-71395-1224 | PK-70873-0304 | 1.100 | 27,94 | 1.199 | 30,45 | | |
| 13 | 26 | 15-45-3226 | A-71395-1026 | PK-70873-0304 | 15-45-3126 | A-71395-1126 | PK-70873-0304 | 15-45-3326 | A-71395-1226 | PK-70873-0304 | 1.200 | 30,48 | 1.299 | 32,99 | | |
| 14 | 28 | 15-45-3228 | A-71395-1028 | PK-70873-0304 | 15-45-3128 | A-71395-1128 | PK-70873-0304 | 15-45-3328 | A-71395-1228 | PK-70873-0304 | 1.300 | 33,02 | 1.399 | 35,53 | | |
| 15 | 30 | 15-45-3230 | A-71395-1030 | PK-70873-0304 | 15-45-3130 | A-71395-1130 | PK-70873-0304 | 15-45-3330 | A-71395-1230 | PK-70873-0304 | 1.400 | 35,56 | 1.499 | 38,07 | | |
| 16 | 32 | 15-45-3232 | A-71395-1032 | PK-70873-0304 | 15-45-3132 | A-71395-1132 | PK-70873-0304 | 15-45-3332 | A-71395-1232 | PK-70873-0304 | 1.500 | 38,10 | 1.599 | 40,61 | | |
| 17 | 34 | 15-45-3234 | A-71395-1034 | PK-70873-0304 | 15-45-3134 | A-71395-1134 | PK-70873-0304 | 15-45-3334 | A-71395-1234 | PK-70873-0304 | 1.600 | 40,64 | 1.699 | 43,15 | | |
| 18 | 36 | 15-45-3236 | A-71395-1036 | PK-70873-0304 | 15-45-3136 | A-71395-1136 | PK-70873-0304 | 15-45-3336 | A-71395-1236 | PK-70873-0304 | 1.700 | 43,18 | 1.799 | 45,69 | | |
| 19 | 38 | 15-45-3238 | A-71395-1038 | PK-70873-0304 | 15-45-3138 | A-71395-1138 | PK-70873-0304 | 15-45-3338 | A-71395-1238 | PK-70873-0304 | 1.800 | 45,72 | 1.899 | 48,23 | | |
| 20 | 40 | 15-45-3240 | A-71395-1040 | PK-70873-0304 | 15-45-3140 | A-71395-1140 | PK-70873-0304 | 15-45-3340 | A-71395-1240 | PK-70873-0304 | 1.900 | 48,26 | 1.999 | 50,77 | | |
| 21 | 42 | 15-45-3242 | A-71395-1042 | PK-70873-0304 | 15-45-3142 | A-71395-1142 | PK-70873-0304 | 15-45-3342 | A-71395-1242 | PK-70873-0304 | 2.000 | 50,80 | 2.099 | 53,31 | | |
| 22 | 44 | 15-45-3244 | A-71395-1044 | PK-70873-0304 | 15-45-3144 | A-71395-1144 | PK-70873-0304 | 15-45-3344 | A-71395-1244 | PK-70873-0304 | 2.100 | 53,34 | 2.199 | 55,85 | | |
| 23 | 46 | 15-45-3246 | A-71395-1046 | PK-70873-0304 | 15-45-3146 | A-71395-1146 | PK-70873-0304 | 15-45-3346 | A-71395-1246 | PK-70873-0304 | 2.200 | 55,88 | 2.299 | 58,39 | | |
| 24 | 48 | 15-45-3248 | A-71395-1048 | PK-70873-0304 | 15-45-3148 | A-71395-1148 | PK-70873-0304 | 15-45-3348 | A-71395-1248 | PK-70873-0304 | 2.300 | 58,42 | 2.399 | 60,93 | | |
| 25 | 50 | 15-45-3250 | A-71395-1050 | PK-70873-0304 | 15-45-3150 | A-71395-1150 | PK-70873-0304 | 15-45-3350 | A-71395-1250 | PK-70873-0304 | 2.400 | 60,96 | 2.499 | 63,47 | | |
| 26 | 52 | 15-45-3252 | A-71395-1052 | PK-70873-0304 | 15-45-3152 | A-71395-1152 | PK-70873-0304 | 15-45-3352 | A-71395-1252 | PK-70873-0304 | 2.500 | 63,50 | 2.599 | 66,01 | | |
| 27 | 54 | 15-45-3254 | A-71395-1054 | PK-70873-0304 | 15-45-3154 | A-71395-1154 | PK-70873-0304 | 15-45-3354 | A-71395-1254 | PK-70873-0304 | 2.600 | 66,04 | 2.699 | 68,55 | | |
| 28 | 56 | 15-45-3256 | A-71395-1056 | PK-70873-0304 | 15-45-3156 | A-71395-1156 | PK-70873-0304 | 15-45-3356 | A-71395-1256 | PK-70873-0304 | 2.700 | 68,58 | 2.799 | 71,09 | | |
| 29 | 58 | 15-45-3258 | A-71395-1058 | PK-70873-0304 | 15-45-3158 | A-71395-1158 | PK-70873-0304 | 15-45-3358 | A-71395-1258 | PK-70873-0304 | 2.800 | 71,12 | 2.899 | 73,63 | | |
| 30 | 60 | 15-45-3260 | A-71395-1060 | PK-70873-0304 | 15-45-3160 | A-71395-1160 | PK-70873-0304 | 15-45-3360 | A-71395-1260 | PK-70873-0304 | 2.900 | 73,66 | 2.999 | 76,17 | | |
| 31 | 62 | 15-45-3262 | A-71395-1062 | PK-70873-0304 | 15-45-3162 | A-71395-1162 | PK-70873-0304 | 15-45-3362 | A-71395-1262 | PK-70873-0304 | 3.000 | 76,20 | 3.099 | 78,71 | | |
| 32 | 64 | 15-45-3264 | A-71395-1064 | PK-70873-0304 | 15-45-3TIN | A-71395-1TIN | PK-70873-0304 | 15-45-3364 | A-71395-1264 | PK-70873-0304 | 3.100 | 78,74 | 3.199 | 81,25 | | |
| 33 | 66 | 15-45-3266 | A-71395-1066 | PK-70873-0304 | 15-45-3166 | A-71395-1166 | PK-70873-0304 | 15-45-3366 | A-71395-1266 | PK-70873-0304 | 3.200 | 81,28 | 3.299 | 83,79 | | |
| 34 | 68 | 15-45-3268 | A-71395-1068 | PK-70873-0304 | 15-45-3168 | A-71395-1168 | PK-70873-0304 | 15-45-3368 | A-71395-1268 | PK-70873-0304 | 3.300 | 83,82 | 3.399 | 86,33 | | |
| 35 | 70 | 15-45-3270 | A-71395-1070 | PK-70873-0304 | 15-45-3170 | A-71395-1170 | PK-70873-0304 | 15-45-3370 | A-71395-1270 | PK-70873-0304 | 3.400 | 86,36 | 3.499 | 88,87 | | |
| 36 | 72 | 15-45-3272 | A-71395-1072 | PK-70873-0304 | 15-45-3172 | A-71395-1172 | PK-70873-0304 | 15-45-3372 | A-71395-1272 | PK-70873-0304 | 3.500 | 88,90 | 3.599 | 91,41 | | |
| 37 | 74 | 15-45-3274 | A-71395-1074 | PK-70873-0304 | 15-45-3174 | A-71395-1174 | PK-70873-0304 | 15-45-3374 | A-71395-1274 | PK-70873-0304 | 3.600 | 91,44 | 3.699 | 93,95 | | |
| 38 | 76 | 15-45-3276 | A-71395-1076 | PK-70873-0304 | 15-45-3176 | A-71395-1176 | PK-70873-0304 | 15-45-3376 | A-71395-1276 | PK-70873-0304 | 3.700 | 93,98 | 3.799 | 96,49 | | |
| 39 | 78 | 15-45-3278 | A-71395-1078 | PK-70873-0304 | 15-45-3178 | A-71395-1178 | PK-70873-0304 | 15-45-3378 | A-71395-1278 | PK-70873-0304 | 3.800 | 96,52 | 3.899 | 99,03 | | |
| 40 | 80 | 15-45-3280 | A-71395-1080 | PK-70873-0304 | 15-45-3180 | A-71395-1180 | PK-70873-0304 | 15-45-3380 | A-71395-1280 | PK-70873-0304 | 3.900 | 99,06 | 3.999 | 101,57 | | |

PLATING:

TIN (3.75 MICROMETER)/150 MICROINCH MINIMUM TIN OVER
(1.25 MICROMETER)/50 MICROINCH MINIMUM NICKEL OVERALL.

15 GOLD (0.37 MICROMETER)/15 MICROINCH MINIMUM SELECTIVE GOLD IN THE CONTACT AREA;
(1.88 MICROMETER)/75 MICROINCH MINIMUM SELECTIVE TIN IN THE PC TAIL AREA OVER
(1.25 MICROMETER)/50 MICROINCH MINIMUM NICKEL OVERALL.

30 GOLD (0.75 MICROMETER)/30 MICROINCH MINIMUM SELECTIVE GOLD IN THE CONTACT AREA;
(1.88 MICROMETER)/75 MICROINCH MINIMUM SELECTIVE TIN IN THE PC TAIL AREA OVER
(1.25 MICROMETER)/50 MICROINCH MINIMUM NICKEL OVERALL.

SEE SHEET 1
EC NO: UCP2010-1001 2009/10/14
DRWN:MS|BARRA 2009/12/01
CH'KD:DMORGAN 2009/12/01
APPR:SMILLER
DESCRIPTION
N
REV

QUALITY SYMBOLS
F =0
F =0
F =0

GENERAL TOLERANCES (UNLESS SPECIFIED)

| | mm | INCH |
|---|---|---|
| 4 PLACES | ± --- | ± --- |
| 3 PLACES | ± --- | ± .010 |
| 2 PLACES | ± 0.25 | ± .014 |
| 1 PLACE | ± 0.35 | ± --- |

ANGULAR ±1/2°

DRAFT WHERE APPLICABLE MUST REMAIN WITHIN DIMENSIONS

DIMENSION STYLE: MM/IN
SCALE: 1:1
DESIGN UNITS: METRIC
THIRD ANGLE PROJECTION

DRAWN BY DATE
CHECKED BY DATE: RB 1985/12/03
APPROVED BY DATE

TITLE: CONNECTOR DUAL ROW VERTICAL SURFACE MOUNT TOP ENTRY ON .100 GRID

molex MOLEX INCORPORATED

MATERIAL NO.: SEE CHART
DOCUMENT NO.: SDA-71395-1***
SHEET NO.: 2 OF 3

SIZE C

THIS DRAWING CONTAINS INFORMATION THAT IS PROPRIETARY TO MOLEX INCORPORATED AND SHOULD NOT BE USED WITHOUT WRITTEN PERMISSION

| NO. OF CKTS. | | TIN PLATING | | | 15 GOLD PLATING | | | 30 GOLD PLATING | | | | | | | | |
|---|---|---|---|---|---|---|---|---|---|---|---|---|---|---|---|---|
| PER ROW | TOTAL | E.D.P. NO. | ENG. NO. | TAPE AND REEL PACKAGING | E.D.P. NO. | ENG. NO. | TAPE AND REEL PACKAGING | E.D.P. NO. | ENG. NO. | TAPE AND REEL PACKAGING | DIM. "A" INCH | DIM. "A" MM | DIM. "B" INCH | DIM. "B" MM | INCH | MM |
| 7 | 14 | NA | NA | NA | NA | NA | NA | 71395-5114 | A-71395-5114 | PK-71395-001 | .600 | 15.24 | .699 | 17.75 | | |
| 8 | 16 | NA | NA | NA | 71395-5016 | A-71395-5016 | PK-71395-001 | NA | NA | NA | .700 | 17.78 | .799 | 20.29 | | |
| | | NA | NA | NA | NA | NA | NA | NA | NA | NA | | | | | | |
| 10 | 20 | NA | NA | NA | 71395-5020 | A-71395-5020 | PK-71395-001 | 71395-5120 | A-71395-5120 | PK-71395-001 | .900 | 22.86 | .999 | 25.37 | | |
| 20 | 40 | NA | NA | NA | 71395-5040 | A-71395-5040 | PK-71395-001 | NA | NA | NA | 1.900 | 48.26 | 1.999 | 50.77 | | |
| | | NA | NA | NA | NA | NA | NA | NA | NA | NA | | | | | | |

PLATING:

TIN (3.75 MICROMETER)/150 MICROINCH MINIMUM TIN OVER
(1.25 MICROMETER)/50 MICROINCH MINIMUM NICKEL OVERALL.

15 GOLD (0.37 MICROMETER)/15 MICROINCH MINIMUM SELECTIVE GOLD IN THE CONTACT AREA;
(1.88 MICROMETER)/75 MICROINCH MINIMUM SELECTIVE TIN IN THE PC TAIL AREA OVER
(1.25 MICROMETER)/50 MICROINCH MINIMUM NICKEL OVERALL.

30 GOLD (0.75 MICROMETER)/30 MICROINCH MINIMUM SELECTIVE GOLD IN THE CONTACT AREA;
(1.88 MICROMETER)/75 MICROINCH MINIMUM SELECTIVE TIN IN THE PC TAIL AREA OVER
(1.25 MICROMETER)/50 MICROINCH MINIMUM NICKEL OVERALL.

ADD 71395-5040
EC NO: UCP2010-1001
DRWN:MS|BARRA 2009/10/14
CH'KD:DMORGAN 2009/12/01
APPR:SMILLER 2009/12/01
DESCRIPTION
N
REV

QUALITY SYMBOLS
E =0
E =0
E =0

GENERAL TOLERANCES (UNLESS SPECIFIED)

| | mm | INCH |
|---|---|---|
| 4 PLACES | ± --- | ± --- |
| 3 PLACES | ± --- | ± .010 |
| 2 PLACES | ± 0.25 | ± .014 |
| 1 PLACE | ± 0.35 | ± --- |

ANGULAR ±1/2°

DRAFT WHERE APPLICABLE MUST REMAIN WITHIN DIMENSIONS

DIMENSION STYLE: MM/IN
SCALE: 1:1
DESIGN UNITS: METRIC
THIRD ANGLE PROJECTION

DRAWN BY DATE
CHECKED BY DATE: RB 1985/12/03
APPROVED BY DATE

TITLE: CONNECTOR DUAL ROW VERTICAL SURFACE MOUNT TOP ENTRY ON .100 GRID

molex MOLEX INCORPORATED

MATERIAL NO.: SEE CHART
DOCUMENT NO.: SDA-71395-1***
SHEET NO.: 3 OF 3

SIZE C

THIS DRAWING CONTAINS INFORMATION THAT IS PROPRIETARY TO MOLEX INCORPORATED AND SHOULD NOT BE USED WITHOUT WRITTEN PERMISSION

## - VERSION WITHOUT PCB RETENTION PEGS -

| NO. OF CKTS. | | TIN PLATING | | | 15 GOLD PLATING | | | 30 GOLD PLATING | | | DIM. "A" | | DIM. "B" | | | |
|---|---|---|---|---|---|---|---|---|---|---|---|---|---|---|---|---|
| PER ROW | TOTAL | E.D.P. NO. | ENG. NO. | TRAY PACKAGING | E.D.P. NO. | ENG. NO. | TRAY PACKAGING | E.D.P. NO. | ENG. NO. | TRAY PACKAGING | INCH | MM | INCH | MM | INCH | MM |
| 2 | 4 | NA | AX-71395-1004 | PK-70873-0304 | NA | AX-71395-1104 | PK-70873-0304 | NA | AX-71395-1204 | PK-70873-0304 | .100 | 2,54 | .199 | 5,05 | | |
| 3 | 6 | 71395-1006 | A-71395-1006 | PK-70873-0304 | NA | AX-71395-1106 | PK-70873-0304 | NA | AX-71395-1206 | PK-70873-0304 | .200 | 5,08 | .299 | 7,59 | | |
| 4 | 8 | 15-45-3208 | A-71395-1008 | PK-70873-0304 | 15-45-3108 | A-71395-1108 | PK-70873-0304 | 15-45-3308 | A-71395-1208 | PK-70873-0304 | .300 | 7,62 | .399 | 10,13 | | |
| 5 | 10 | 15-45-3210 | A-71395-1010 | PK-70873-0304 | 15-45-3110 | A-71395-1110 | PK-70873-0304 | 15-45-3310 | A-71395-1210 | PK-70873-0304 | .400 | 10,16 | .499 | 12,67 | | |
| 6 | 12 | 15-45-3212 | A-71395-1012 | PK-70873-0304 | 15-45-3112 | A-71395-1112 | PK-70873-0304 | 15-45-3312 | A-71395-1212 | PK-70873-0304 | .500 | 12,70 | .599 | 15,21 | | |
| 7 | 14 | 15-45-3214 | A-71395-1014 | PK-70873-0304 | 15-45-3114 | A-71395-1114 | PK-70873-0304 | 15-45-3314 | A-71395-1214 | PK-70873-0304 | .600 | 15,24 | .699 | 17,75 | | |
| 8 | 16 | 15-45-3216 | A-71395-1016 | PK-70873-0304 | 15-45-3116 | A-71395-1116 | PK-70873-0304 | 15-45-3316 | A-71395-1216 | PK-70873-0304 | .700 | 17,78 | .799 | 20,29 | | |
| 9 | 18 | 15-45-3218 | A-71395-1018 | PK-70873-0304 | 15-45-3118 | A-71395-1118 | PK-70873-0304 | 15-45-3318 | A-71395-1218 | PK-70873-0304 | .800 | 20,32 | .899 | 22,83 | | |
| 10 | 20 | 15-45-3220 | A-71395-1020 | PK-70873-0304 | 15-45-3120 | A-71395-1120 | PK-70873-0304 | 15-45-3320 | A-71395-1220 | PK-70873-0304 | .900 | 22,86 | .999 | 25,37 | | |
| 11 | 22 | 15-45-3222 | A-71395-1022 | PK-70873-0304 | 15-45-3122 | A-71395-1122 | PK-70873-0304 | 15-45-3322 | A-71395-1222 | PK-70873-0304 | 1.000 | 25,40 | 1.099 | 27,91 | | |
| 12 | 24 | 15-45-3224 | A-71395-1024 | PK-70873-0304 | 15-45-3124 | A-71395-1124 | PK-70873-0304 | 15-45-3324 | A-71395-1224 | PK-70873-0304 | 1.100 | 27,94 | 1.199 | 30,45 | | |
| 13 | 26 | 15-45-3226 | A-71395-1026 | PK-70873-0304 | 15-45-3126 | A-71395-1126 | PK-70873-0304 | 15-45-3326 | A-71395-1226 | PK-70873-0304 | 1.200 | 30,48 | 1.299 | 32,99 | | |
| 14 | 28 | 15-45-3228 | A-71395-1028 | PK-70873-0304 | 15-45-3128 | A-71395-1128 | PK-70873-0304 | 15-45-3328 | A-71395-1228 | PK-70873-0304 | 1.300 | 33,02 | 1.399 | 35,53 | | |
| 15 | 30 | 15-45-3230 | A-71395-1030 | PK-70873-0304 | 15-45-3130 | A-71395-1130 | PK-70873-0304 | 15-45-3330 | A-71395-1230 | PK-70873-0304 | 1.400 | 35,56 | 1.499 | 38,07 | | |
| 16 | 32 | 15-45-3232 | A-71395-1032 | PK-70873-0304 | 15-45-3132 | A-71395-1132 | PK-70873-0304 | 15-45-3332 | A-71395-1232 | PK-70873-0304 | 1.500 | 38,10 | 1.599 | 40,61 | | |
| 17 | 34 | 15-45-3234 | A-71395-1034 | PK-70873-0304 | 15-45-3134 | A-71395-1134 | PK-70873-0304 | 15-45-3334 | A-71395-1234 | PK-70873-0304 | 1.600 | 40,64 | 1.699 | 43,15 | | |
| 18 | 36 | 15-45-3236 | A-71395-1036 | PK-70873-0304 | 15-45-3136 | A-71395-1136 | PK-70873-0304 | 15-45-3336 | A-71395-1236 | PK-70873-0304 | 1.700 | 43,18 | 1.799 | 45,69 | | |
| 19 | 38 | 15-45-3238 | A-71395-1038 | PK-70873-0304 | 15-45-3138 | A-71395-1138 | PK-70873-0304 | 15-45-3338 | A-71395-1238 | PK-70873-0304 | 1.800 | 45,72 | 1.899 | 48,23 | | |
| 20 | 40 | 15-45-3240 | A-71395-1040 | PK-70873-0304 | 15-45-3140 | A-71395-1140 | PK-70873-0304 | 15-45-3340 | A-71395-1240 | PK-70873-0304 | 1.900 | 48,26 | 1.999 | 50,77 | | |
| 21 | 42 | 15-45-3242 | A-71395-1042 | PK-70873-0304 | 15-45-3142 | A-71395-1142 | PK-70873-0304 | 15-45-3342 | A-71395-1242 | PK-70873-0304 | 2.000 | 50,80 | 2.099 | 53,31 | | |
| 22 | 44 | 15-45-3244 | A-71395-1044 | PK-70873-0304 | 15-45-3144 | A-71395-1144 | PK-70873-0304 | 15-45-3344 | A-71395-1244 | PK-70873-0304 | 2.100 | 53,34 | 2.199 | 55,85 | | |
| 23 | 46 | 15-45-3246 | A-71395-1046 | PK-70873-0304 | 15-45-3146 | A-71395-1146 | PK-70873-0304 | 15-45-3346 | A-71395-1246 | PK-70873-0304 | 2.200 | 55,88 | 2.299 | 58,39 | | |
| 24 | 48 | 15-45-3248 | A-71395-1048 | PK-70873-0304 | 15-45-3148 | A-71395-1148 | PK-70873-0304 | 15-45-3348 | A-71395-1248 | PK-70873-0304 | 2.300 | 58,42 | 2.399 | 60,93 | | |
| 25 | 50 | 15-45-3250 | A-71395-1050 | PK-70873-0304 | 15-45-3150 | A-71395-1150 | PK-70873-0304 | 15-45-3350 | A-71395-1250 | PK-70873-0304 | 2.400 | 60,96 | 2.499 | 63,47 | | |
| 26 | 52 | 15-45-3252 | A-71395-1052 | PK-70873-0304 | 15-45-3152 | A-71395-1152 | PK-70873-0304 | 15-45-3352 | A-71395-1252 | PK-70873-0304 | 2.500 | 63,50 | 2.599 | 66,01 | | |
| 27 | 54 | 15-45-3254 | A-71395-1054 | PK-70873-0304 | 15-45-3154 | A-71395-1154 | PK-70873-0304 | 15-45-3354 | A-71395-1254 | PK-70873-0304 | 2.600 | 66,04 | 2.699 | 68,55 | | |
| 28 | 56 | 15-45-3256 | A-71395-1056 | PK-70873-0304 | 15-45-3156 | A-71395-1156 | PK-70873-0304 | 15-45-3356 | A-71395-1256 | PK-70873-0304 | 2.700 | 68,58 | 2.799 | 71,09 | | |
| 29 | 58 | 15-45-3258 | A-71395-1058 | PK-70873-0304 | 15-45-3158 | A-71395-1158 | PK-70873-0304 | 15-45-3358 | A-71395-1258 | PK-70873-0304 | 2.800 | 71,12 | 2.899 | 73,63 | | |
| 30 | 60 | 15-45-3260 | A-71395-1060 | PK-70873-0304 | 15-45-3160 | A-71395-1160 | PK-70873-0304 | 15-45-3360 | A-71395-1260 | PK-70873-0304 | 2.900 | 73,66 | 2.999 | 76,17 | | |
| 31 | 62 | 15-45-3262 | A-71395-1062 | PK-70873-0304 | 15-45-3162 | A-71395-1162 | PK-70873-0304 | 15-45-3362 | A-71395-1262 | PK-70873-0304 | 3.000 | 76,20 | 3.099 | 78,71 | | |
| 32 | 64 | 15-45-3264 | A-71395-1064 | PK-70873-0304 | 15-45-3TIN | A-71395-1TIN | PK-70873-0304 | 15-45-3364 | A-71395-1264 | PK-70873-0304 | 3.100 | 78,74 | 3.199 | 81,25 | | |
| 33 | 66 | 15-45-3266 | A-71395-1066 | PK-70873-0304 | 15-45-3166 | A-71395-1166 | PK-70873-0304 | 15-45-3366 | A-71395-1266 | PK-70873-0304 | 3.200 | 81,28 | 3.299 | 83,79 | | |
| 34 | 68 | 15-45-3268 | A-71395-1068 | PK-70873-0304 | 15-45-3168 | A-71395-1168 | PK-70873-0304 | 15-45-3368 | A-71395-1268 | PK-70873-0304 | 3.300 | 83,82 | 3.399 | 86,33 | | |
| 35 | 70 | 15-45-3270 | A-71395-1070 | PK-70873-0304 | 15-45-3170 | A-71395-1170 | PK-70873-0304 | 15-45-3370 | A-71395-1270 | PK-70873-0304 | 3.400 | 86,36 | 3.499 | 88,87 | | |
| 36 | 72 | 15-45-3272 | A-71395-1072 | PK-70873-0304 | 15-45-3172 | A-71395-1172 | PK-70873-0304 | 15-45-3372 | A-71395-1272 | PK-70873-0304 | 3.500 | 88,90 | 3.599 | 91,41 | | |
| 37 | 74 | 15-45-3274 | A-71395-1074 | PK-70873-0304 | 15-45-3174 | A-71395-1174 | PK-70873-0304 | 15-45-3374 | A-71395-1274 | PK-70873-0304 | 3.600 | 91,44 | 3.699 | 93,95 | | |
| 38 | 76 | 15-45-3276 | A-71395-1076 | PK-70873-0304 | 15-45-3176 | A-71395-1176 | PK-70873-0304 | 15-45-3376 | A-71395-1276 | PK-70873-0304 | 3.700 | 93,98 | 3.799 | 96,49 | | |
| 39 | 78 | 15-45-3278 | A-71395-1078 | PK-70873-0304 | 15-45-3178 | A-71395-1178 | PK-70873-0304 | 15-45-3378 | A-71395-1278 | PK-70873-0304 | 3.800 | 96,52 | 3.899 | 99,03 | | |
| 40 | 80 | 15-45-3280 | A-71395-1080 | PK-70873-0304 | 15-45-3180 | A-71395-1180 | PK-70873-0304 | 15-45-3380 | A-71395-1280 | PK-70873-0304 | 3.900 | 99,06 | 3.999 | 101,57 | | |

PLATING:

TIN (3.75 MICROMETER)/150 MICROINCH MINIMUM TIN OVER
(1.25 MICROMETER)/50 MICROINCH MINIMUM NICKEL OVERALL.

15 GOLD (0.37 MICROMETER)/15 MICROINCH MINIMUM SELECTIVE GOLD IN THE CONTACT AREA;
(1.88 MICROMETER)/75 MICROINCH MINIMUM SELECTIVE TIN IN THE PC TAIL AREA OVER
(1.25 MICROMETER)/50 MICROINCH MINIMUM NICKEL OVERALL.

30 GOLD (0.75 MICROMETER)/30 MICROINCH MINIMUM SELECTIVE GOLD IN THE CONTACT AREA;
(1.88 MICROMETER)/75 MICROINCH MINIMUM SELECTIVE TIN IN THE PC TAIL AREA OVER
(1.25 MICROMETER)/50 MICROINCH MINIMUM NICKEL OVERALL.

ADD 71395-1006 2007/06/19
EC NO: UCP2007-2946 2007/06/19
DRWN:DMORGAN CHKD:MSIBARRA APPR:SMILLER 2007/06/22
REV DESCRIPTION

QUALITY SYMBOLS
▼=0
▽=0

GENERAL TOLERANCES (UNLESS SPECIFIED)

| | mm | INCH |
|---|---|---|
| 4 PLACES | ± --- | ± --- |
| 3 PLACES | ± --- | ± .010 |
| 2 PLACES | ± 0.25 | ± .014 |
| 1 PLACE | ± 0.35 | ± --- |

ANGULAR ±1/2°

DRAFT WHERE APPLICABLE MUST REMAIN WITHIN DIMENSIONS

DIMENSION STYLE: MM/IN
SCALE: 10:1
DESIGN UNITS: METRIC
THIRD ANGLE PROJECTION

DRAWN BY DATE
CHECKED BY DATE: RB 12/03/85
APPROVED BY DATE

TITLE: CONNECTOR DUAL ROW VERTICAL SURFACE MOUNT TOP ENTRY ON .100 GRID

molex MOLEX INCORPORATED

MATERIAL NO.: SEE TABLE
DOCUMENT NO.: SDA-71395-1***
SHEET NO.: 2

SIZE C

THIS DRAWING CONTAINS INFORMATION THAT IS PROPRIETARY TO MOLEX INCORPORATED AND SHOULD NOT BE USED WITHOUT WRITTEN PERMISSION