This document was generated on 05/27/2010

PLEASE CHECK WWW.MOLEX.COM FOR LATEST PART INFORMATION

Part Number: 0015388039
Status: Active
Overview: cgrid__sl_products
Description: 2.54mm (.100") C-Grid SL™ Single Row, Female, Version D Receptacle, 3 Circuits

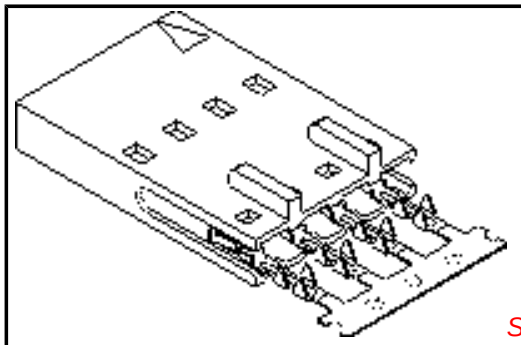

Series image - Reference only

Documents:

3D Model
Drawing (PDF)
Product Specification PS-70430 (PDF)
RoHS Certificate of Compliance (PDF)

Agency Certification

CSA	LR19880
UL	E29179

General

Product Family	FFC/FPC Connectors
Series	70430
Comments	Stackable Back-to-Back
Overview	cgrid__sl_products
Product Name	SL™

Physical

Circuits (Loaded)	3
Color - Resin	Black
Contact Position	N/A
Durability (mating cycles max)	25
Entry Angle	Vertical
Flammability	94V-0
Material - Metal	Phosphor Bronze
Material - Plating Mating	Tin
Material - Plating Termination	Tin
Material - Resin	Polyester Alloy
Number of Rows	1
Orientation	Vertical
PCB Retention	None
Packaging Type	Tube
Pitch - Mating Interface (in)	0.100 In
Pitch - Mating Interface (mm)	2.54 mm
Plating min: Mating (µin)	150
Plating min: Mating (µm)	3.75
Plating min: Termination (µin)	75
Plating min: Termination (µm)	1.875
Polarized to PCB	No
Stackable	Yes
Temperature Range - Operating	-40°C to +105°C
Termination Interface: Style	IDT or Pierce
Wire/Cable Type	FFC/FPC

Electrical

Current - Maximum per Contact	1A, 2A
Voltage - Maximum	250V

Material Info

Old Part Number	70430-0072

Reference - Drawing Numbers

Product Specification	PS-70430
Sales Drawing	SDA-70430-0071-0094

EU RoHS
ELV and RoHS Compliant
REACH SVHC
Not Reviewed
Halogen-Free Status
Not Reviewed

China RoHS

Need more information on product environmental compliance?

Email productcompliance@molex.com
For a multiple part number RoHS Certificate of Compliance, click here

Please visit the Contact Us section for any non-product compliance questions.

Search Parts in this Series
70430Series

Mates With
70004 Interim Clip, 70013 Interim Clip

Application Tooling | **FAQ**

Tooling specifications and manuals are found by selecting the products below. Crimp Height Specifications are then contained in the Application Tooling Specification document.

Global

Description	Product #
Manual Ribbon Cable Cutter Hand Tool	0638170100
Tool Kit for Standard Manual Press FFC	0622007400
Standard Manual Press for FFC	0622007800
TM-42™ FFC and SL™ Termination Kit	0622018700

TM-42™ FFC and SL™ Press and Termination Kit for 110v applications	0622020800

This document was generated on 05/27/2010

PLEASE CHECK WWW.MOLEX.COM FOR LATEST PART INFORMATION

"D" - OPTION

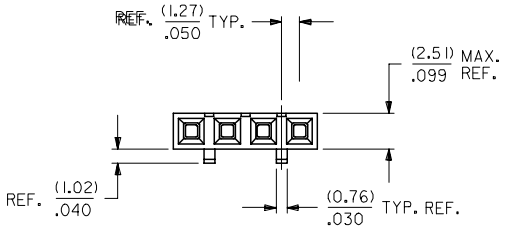

NOTES:

1) PRE LOADED ASSEMBLY TO BE USED WITH (0.30)/.012 MAX. THICK FLAT FLEX CABLE WITH (1.57)/.062 WIDE COPPER CONDUCTORS ON (2.54)/.100 CENTERS OR, (0.13)/.005 - (0.28)/.011 THICK MYLAR WITH (1.02)/.040 - (1.65)/.065 WIDE SILVER INK CONDUCTORS ON (2.54)/.100 CENTERS.
2) STANDARD PACKING PER PK70873-0001 SHALL BE USED.
3) SEE CHART FOR CIRCUIT SIZES, "A" AND "B" DIMENSIONS.
4) TWO (2) CIRCUIT ASSEMBLIES SUPPLIED AS GROUPED PAIRS.
5) PART MATES WITH (0.64)/.025 SQ. PINS, (8.13)/.320 TO (5.08)/.200 LONG ON (2.54)/.100 CENTERS.
6) REFER TO SDA-70430-**** (SHEET 3) FOR MINOR VARIATIONS TO "G" OPTION HOUSINGS.
7) PARTS STACKABLE SIDE TO SIDE ON (2.54)/.100 CENTERS.
8) PARTS CONFORM TO CLASS B OF COSMETIC SPECIFICATION PS-45499-002.

CKT. SIZE	EDP. NO.	ENG. NO.	A	B
2	015-38-8029	70430-0071	(2.54) .100	(5.05) .199
3	015-38-8039	70430-0072	(5.08) .200	(7.59) .299
4	015-38-8049	70430-0073	(7.62) .300	(10.13) .399
5	015-38-8059	70430-0074	(10.16) .400	(12.67) .499
6	015-38-8069	70430-0075	(12.70) .500	(15.21) .599
7	015-38-8079	70430-0076	(15.24) .600	(17.75) .699
8	015-38-8089	70430-0077	(17.78) .700	(20.29) .799
9	015-38-8099	70430-0078	(20.32) .800	(22.83) .899
10	015-38-8109	70430-0079	(22.86) .900	(25.37) .999
11	015-38-8119	70430-0080	(25.40) 1.000	(27.91) 1.099
12	015-38-8129	70430-0081	(27.94) 1.100	(30.45) 1.199
13	015-38-8139	70430-0082	(30.48) 1.200	(32.99) 1.299
14	015-38-8149	70430-0083	(33.02) 1.300	(35.53) 1.399
15	015-38-8159	70430-0084	(35.56) 1.400	(38.07) 1.499
16	015-38-8169	70430-0085	(38.10) 1.500	(40.61) 1.599
17	015-38-8179	70430-0086	(40.64) 1.600	(43.15) 1.699
18	015-38-8189	70430-0087	(43.18) 1.700	(45.69) 1.799
19	015-38-8199	70430-0088	(45.72) 1.800	(48.23) 1.899
20	015-38-8209	70430-0089	(48.26) 1.900	(50.77) 1.999
21	015-38-8219	70430-0090	(50.80) 2.000	(53.31) 2.099
22	015-38-8229	70430-0091	(53.34) 2.100	(55.85) 2.199
23	015-38-8239	70430-0092	(55.88) 2.200	(58.39) 2.299
24	015-38-8249	70430-0093	(58.42) 2.300	(60.93) 2.399
25	015-38-8259	70430-0094	(60.96) 2.400	(63.47) 2.499

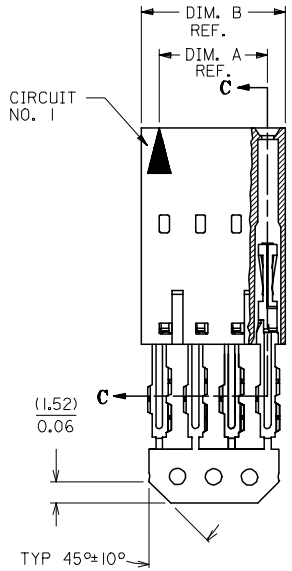

SECTION C-C

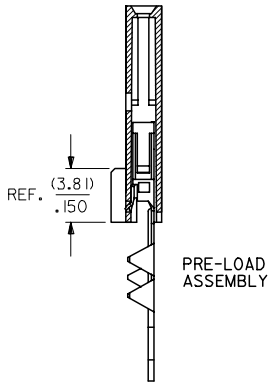

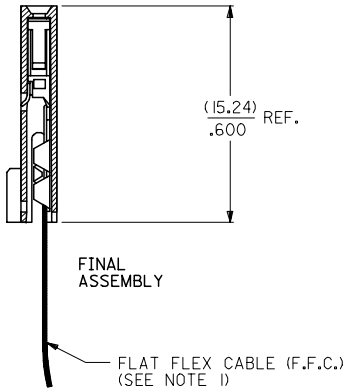

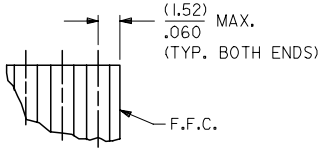

DETAIL - 1
(SEE NOTE 7)

HOUSING MATERIAL: GLASS FILLED POLYSTER, UL 94V-0.
TERMINAL MATERIAL: PHOSPHOR BRONZE.
PLATING: TIN - .000150 MINIMUM TIN OVER
.000050 MINIMUM NICKEL PLATE.

CONTACT PLATING	COLOR CODE
TIN	NONE
15 GOLD	YELLOW
30 GOLD	RED

ADD TOLERANCE
EC NO: UCP2007-2849 2007/05/18
DRWN:DMORGAN 2007/05/21
CH'KD:MS BARRA
APPR:SMILLER 2007/05/21
DESCRIPTION
REV D

QUALITY SYMBOLS
▼=0
▽=0

GENERAL TOLERANCES (UNLESS SPECIFIED)

	mm	INCH
4 PLACES	± ---	± ---
3 PLACES	± ---	± .010
2 PLACES	± 0.25	± .015
1 PLACE	± 0.38	± ---
ANGULAR ±1/2°		

DRAFT WHERE APPLICABLE MUST REMAIN WITHIN DIMENSIONS

DIMENSION STYLE: MM/IN
SCALE: 4:1
DESIGN UNITS: INCH
THIRD ANGLE PROJECTION

DRAWN BY: RAS DATE: 1986/07/21
CHECKED BY: MJM DATE: 1986/07/21
APPROVED BY: WAZ DATE: 1986/07/21

TITLE: ASSEMBLY, CONNECTOR FFC FEMALE SINGLE ROW (2.54)/.100 GRID

MOLEX INCORPORATED

MATERIAL NO.: SEE TABLE
DOCUMENT NO.: SDA-70430-0071-0094
SHEET NO.: 1 OF 1
SIZE C

THIS DRAWING CONTAINS INFORMATION THAT IS PROPRIETARY TO MOLEX INCORPORATED AND SHOULD NOT BE USED WITHOUT WRITTEN PERMISSION