This document was generated on 05/21/2010

PLEASE CHECK WWW.MOLEX.COM FOR LATEST PART INFORMATION

Part Number: 0014567245
Status: Active
Overview: cgrid__sl_products
Description: 2.54mm (.100") Pitch SL™ Insulation Displacement Connector Assembly, Female, Single Row, Version C, Front Ribs, Wire Size 22, 0.38µm (15µ") Gold (Au), 24 Circuits

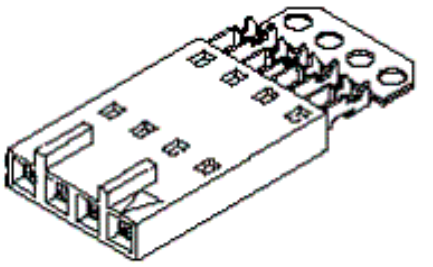

Series image - Reference only

Documents:

- 3D Model
- Drawing (PDF)
- Product Specification PS-70400 (PDF)
- RoHS Certificate of Compliance (PDF)

Agency Certification

CSA	LR19980
UL	E29179

General

Product Family	Ribbon Cable / Wire Trap Connectors
Series	70400
Comments	Terminals Preloaded
Component Type	Housing
Glow-Wire Compliant	No
Overview	cgrid__sl_products
Product Name	SL™

Physical

Circuits (Loaded)	24
Color - Resin	Black
Durability (mating cycles max)	50
Entry Angle	Vertical
Flammability	94V-0
Lock to Mating Part	None
Material - Metal	Phosphor Bronze
Material - Plating Mating	Gold
Material - Plating Termination	Tin
Material - Resin	Polyester Alloy
Number of Rows	1
PCB Retention	None
Packaging Type	Tube
Pitch - Mating Interface (in)	0.100 In
Pitch - Mating Interface (mm)	2.54 mm
Plating min: Mating (µin)	15
Plating min: Mating (µm)	0.375
Plating min: Termination (µin)	75
Plating min: Termination (µm)	1.875
Polarized to Mating Part	Yes
Stackable	Yes
Surface Mount Compatible (SMC)	N/A
Temperature Range - Operating	-40°C to +105°C
Termination Interface: Style	IDT or Pierce
Wire Insulation Diameter	1.35mm (.053") max.
Wire Size AWG	22
Wire/Cable Type	Discrete Wire, Ribbon Cable

Electrical

Current - Maximum per Contact	3A
Voltage - Maximum	250V

Material Info

EU RoHS
ELV and RoHS Compliant
REACH SVHC
Not Reviewed
Halogen-Free Status
Not Reviewed

China RoHS

Need more information on product environmental compliance?

Email productcompliance@molex.com
For a multiple part number RoHS Certificate of Compliance, click here

Please visit the Contact Us section for any non-product compliance questions.

Search Parts in this Series
70400Series

Mates With
70544, 70546, 70554 , 70556

Use With
7307 Tinned 28AWG, 7767 Topcoat 28AWG, 24241 Tinned 26AWG, 8996 Topcoat 26AWG, 24226 Tinned 24AWG, 8997 Topcoat 24AWG, 24369 High Flex 26AWG, 24389 High Flex 24AWG

Application Tooling | **FAQ**

Tooling specifications and manuals are found by selecting the products below. Crimp Height Specifications are then contained in the Application Tooling Specification document.

Global

Description	Product #
Hawk Semi-Automatice Discrete Wire Terminator for SL - Rebuilt US*	0011201337

Reference - Drawing Numbers

Product Specification	PS-70400
Sales Drawing	SDA-70400-3210-3233

Hawk™ Ribbon Cable Terminator for SL without Break-off	0623003000
Hawk™ Semi-Automatic Discrete Wire Terminator for SL - Rebuilt CE Approved*	0623004900
Hawk™ Flat Flex Cable Terminator for SL with Break-off	0623005200
Hawk™ Ribbon Cable Terminator with for SL Break-off	0623005300
IDT Discrete Handtool Module for SL™	0621000700
Hawk™ Semi-Automatic Discrete Wire Terminator for SL	0623003100

OPTION C

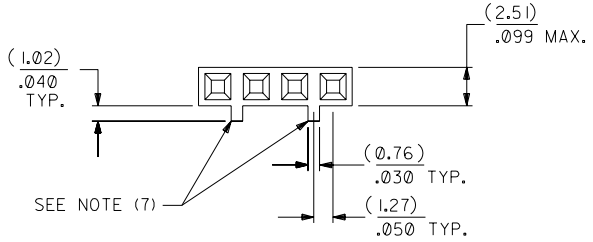

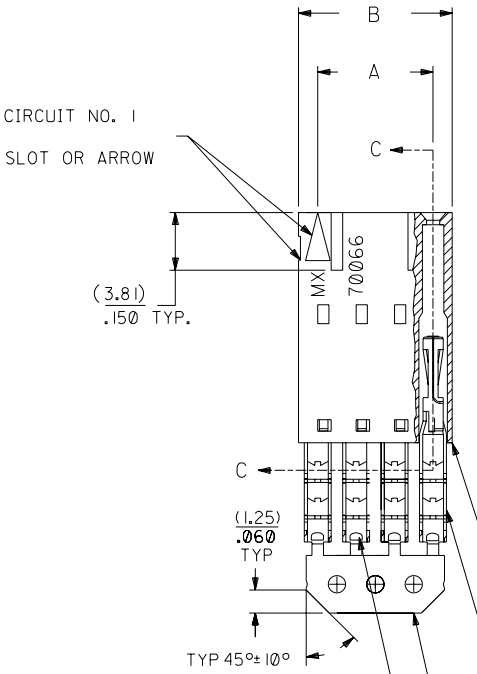

NOTES:

1) TO BE USED WITH (22) AWG. STRANDED WIRE WITH (1.35)/.053 DIA. MAX. INSULATION.
2) SEE CHART FOR CIRCUIT SIZES.
3) STANDARD PACKAGING PER PK-70873-0001. OPTIONAL PACKAGING MAY BE AVAILABLE, REQUEST DWG. PK-70400
4) PARTS STACKABLE END TO END ON (2.54)/.100 CENTERS.
5) REFER TO PRODUCT SPECIFICATION: PS-70400.
6) SEE DWG. SDA-70400-**** (SHT. 5) FOR OPTIONAL HOUSING DETAILS.
7) 4 CIRCUIT SHOWN. 4 - 25 CKT'S. HAVE (2) RIBS.
8) TO MATE WITH MOLEX PART NO'S.: A-70374-****, A-70376-****, A-70390-****, A-70392-****, A-70544-****, A-70554-****, A-70542-****, A-70552-****, A-70546-****, A-70556-****.
9) 2 CIRCUIT ASSEMBLIES SUPPLIED AS GROUPED PAIRS.

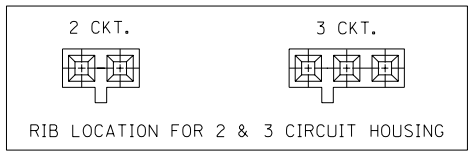

SECTION C-C

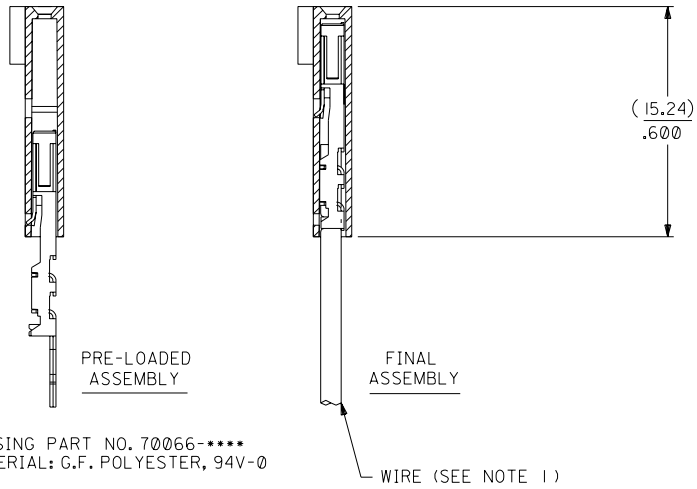

CKT. SIZE	A	B	EDP. NO.	ENG. NO.
2	(2.54) .100	(5.05) .199	14-56-7025	A-70400-3210
3	(5.08) .200	(7.59) .299	14-56-7035	A-70400-3211
4	(7.62) .300	(10.13) .399	14-56-7045	A-70400-3212
5	(10.16) .400	(12.67) .499	14-56-7055	A-70400-3213
6	(12.70) .500	(15.21) .599	14-56-7065	A-70400-3214
7	(15.24) .600	(17.75) .699	14-56-7075	A-70400-3215
8	(17.78) .700	(20.29) .799	14-56-7085	A-70400-3216
9	(20.32) .800	(22.83) .899	14-56-7095	A-70400-3217
10	(22.86) .900	(25.37) .999	14-56-7105	A-70400-3218
11	(25.54) 1.000	(27.91) 1.099	14-56-7115	A-70400-3219
12	(27.94) 1.100	(30.45) 1.199	14-56-7125	A-70400-3220
13	(30.48) 1.200	(32.99) 1.299	14-56-7135	A-70400-3221
14	(33.02) 1.300	(35.53) 1.399	14-56-7145	A-70400-3222
15	(35.56) 1.400	(38.07) 1.499	14-56-7155	A-70400-3223
16	(38.01) 1.500	(40.61) 1.599	14-56-7165	A-70400-3224
17	(40.64) 1.600	(43.15) 1.699	14-56-7175	A-70400-3225
18	(43.18) 1.700	(45.69) 1.799	14-56-7185	A-70400-3226
19	(45.72) 1.800	(48.23) 1.899	14-56-7195	A-70400-3227
20	(48.26) 1.900	(50.77) 1.999	14-56-7205	A-70400-3228
21	(50.80) 2.000	(53.31) 2.099	14-56-7215	A-70400-3229
22	(53.34) 2.100	(55.85) 2.199	14-56-7225	A-70400-3230
23	(55.88) 2.200	(58.39) 2.299	14-56-7235	A-70400-3231
24	(58.42) 2.300	(60.93) 2.399	14-56-7245	A-70400-3232
25	(60.96) 2.400	(63.47) 2.499	14-56-7255	A-70400-3233

70400

I.D. SLOT CODE TO WIRE GAUGE CHART	
I.D. SLOT CODE	WIRE GAUGE
D	22 AWG.

PLATING CODE (STRIPE ON CARRIER STRIP)	
PLATING	COLOR
15 GOLD	YELLOW

15 GOLD - .000015 MIN. GOLD IN SELECT AREA WITH .000075 MIN. TIN IN SELECT AREA OVER .000050 MIN. NICKEL OVER-ALL.

*THE PRIMARY SHIPPING CARTON WILL BE LABELED "COMPLIANT TO RoHS DIRECTIVE 2002/95/EC AND ELV ANNEX II OF DIRECTIVE 2000/53/EC". CARTONS WITHOUT THIS LABEL MAY CONTAIN PRODUCT WITH LEAD.

LTR.	REVISIONS	LTR.	REVISIONS
		C	REVISED PER ECR NO. U82110 10-17-88 BJS
D	LEAD FREE UCP2004-1769 RWHITE 04/03/22	B	REVISE PER ECR #U80110 2/3/88 MJM
C1	ADD CARRIER CHAMF ECN #UDT1998-0280 05/20/98 LMCGRATH	A	RELEASE FOR PROD. PER ERO NO. 25421 10-26-87 AAB

DIMENSIONS SHOWN (METRIC) INCH
UNLESS OTHERWISE SPECIFIED TOLERANCES: ANGULAR ± 1/2°

	INCH	METRIC
3 PLACE	± .010	---
2 PLACE	± .014	± 0.25
1 PLACE	---	± 0.35

DRAFT WHERE APPLICABLE MUST REMAIN WITHIN DIMENSIONS

DRWG. BY AAB | CHK'D. BY WAZ | APP'D. BY | SCALE 4 : 1

MFG. | SH. | REV.

▽ = ▼ = REVISE ONLY ON CAD SYSTEM

TITLE: ASSEMBLY, SL CONNECTOR (SINGLE ROW- (2.54)/.100 GRID)

molex MOLEX INCORPORATED LISLE,ILL. 60532 U.S.A. | SHEET NO. | DATE 10/26/87

PART NO. SEE CHART | DRWG. NO. SDA-70400-3210-3233

FILE NAME 7400321O DGN

THIS DRAWING CONTAINS INFORMATION THAT IS PROPRIETARY TO MOLEX INC. AND SHOULD NOT BE USED WITHOUT WRITTEN PERMISSION.

DIV. DA | SIZE C