This document was generated on 01/26/2012

PLEASE CHECK WWW.MOLEX.COM FOR LATEST PART INFORMATION

Part Number: 0011405302
Status: Active
Description: Conductor Anvil

Documents:
RoHS Certificate of Compliance (PDF)

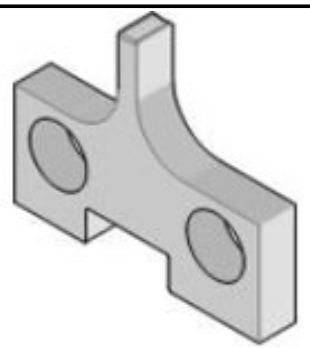

Series image - Reference only

General

Product Family	Application Tooling
Series	T1719
Comments	See Tooling Specification (PDF) Above
Function	Cutter
Geographic Area	Global
Level of Automation	Semi-Automatic
More Detailed Tech Information	applicationtooling@molex.com
Product Name	N/A
Survey	www.molex.com//review/apptool_survey.html
Tool Type	Anvil

Material Info

Old Part Number	8342-2

Reference - Drawing Numbers

Application Tooling Documents	ATS-STANDARD-PARTS

EU RoHS **China RoHS**
Compliance Status
Not Reviewed
REACH SVHC
Not Reviewed
Low-Halogen Status
Not Reviewed

Need more information on product environmental compliance?

Email productcompliance@molex.com
For a multiple part number RoHS Certificate of Compliance, click here

Please visit the Contact Us section for any non-product compliance questions.

Search Parts in this Series
T1719Series

Use With
0011402089 , 0011403257

This document was generated on 01/26/2012

PLEASE CHECK WWW.MOLEX.COM FOR LATEST PART INFORMATION