This document was generated on 03/26/2012

PLEASE CHECK WWW.MOLEX.COM FOR LATEST PART INFORMATION

Part Number: 11-40-2163
Status: Active
Description: Terminator Die - 12/18 COMBINATION

Documents:
RoHS Certificate of Compliance (PDF)

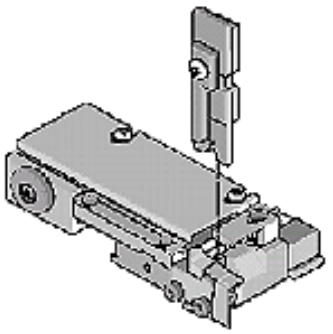

Series image - Reference only

General

Product Family	Application Tooling
Series	T1801
Comments	12/18 COMBINATION
Function	Crimp
Geographic Area	Global
Level of Automation	Semi-Automatic
More Detailed Tech Information	applicationtooling@molex.com
Product Name	N/A
Survey	www.molex.com//review/apptool_survey.html
Tool Type	Terminator Die

Material Info

Old Part Number	T8368A

Reference - Drawing Numbers

Application Tooling Documents	T8368A, TM-638000029, TM-638000029CN, TM-638000029DE, TM-638000029FR, TM-638000029IT, TM-638000029JP, TM-638000029KR, TM-638000029MY, TM-638000029PL, TM-638000029RU, TM-638000029SK, TM-638000029SP, TM-638000029TH, TM-638000029TW, TM-638000029VN, TM-638500090, TM-638500090SP

EU RoHS	China RoHS
Compliance Status	
Not Reviewed	
REACH SVHC	
Not Reviewed	
Low-Halogen Status	
Not Reviewed	

Need more information on product environmental compliance?

Email productcompliance@molex.com
For a multiple part number RoHS Certificate of Compliance, click here

Please visit the Contact Us section for any non-product compliance questions.

Search Parts in this Series
T1801Series

Use With
Molex TM-42™ press 0690025001 and base unit 0011193001 for the 3BF press

Application Tooling Description	| FAQ Product #
3.18mm Diameter HCS-125 Pin and Socket Crimp Terminal, Series 1901, Female, with Tin (Sn) Plated Brass Contact, 10-14 AWG, Bag	0018121602
3.18mm Diameter HCS-125 Pin and Socket Crimp Terminal, Series 1900, Male, with Tin (Sn) Plated Brass Contact, 10-14 AWG, Reel	0018122601

This document was generated on 03/26/2012

PLEASE CHECK WWW.MOLEX.COM FOR LATEST PART INFORMATION