molex
one company > a world of innovation

This document was generated on 03/29/2010

PLEASE CHECK WWW.MOLEX.COM FOR LATEST PART INFORMATION

Part Number: 0010897282

Status: Active

Description: 2.54mm (.100") Pitch C-Grid® Breakaway Header, Dual Row, Vertical, High Temperature, 28 Circuits, 0.38µm (15µ") Gold (Au) Selective Plating, Tin (Sn) PC Tail Plating, 2.72mm (.107") PC Tail

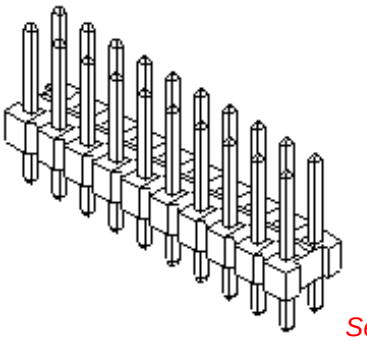

Series image - Reference only

Documents:

3D Model
Drawing (PDF)
Product Specification PS-70280 (PDF)
RoHS Certificate of Compliance (PDF)

Agency Certification

CSA	LR19980
UL	E29179

General

Product Family	PCB Headers
Series	70280
Application	Board-to-Board, Wire-to-Board
Product Name	C-Grid®

Physical

Breakaway	Yes
Circuits (Loaded)	28
Circuits (maximum)	28
Color - Resin	Black
Durability (mating cycles max)	50
First Mate / Last Break	No
Flammability	94V-0
Glow-Wire Compliant	No
Guide to Mating Part	No
Keying to Mating Part	None
Lock to Mating Part	None
Material - Metal	Copper Alloy
Material - Plating Mating	Gold
Material - Plating Termination	Tin
Material - Resin	High Temperature Thermoplastic
Number of Rows	2
Orientation	Vertical
PC Tail Length (in)	0.110 In
PC Tail Length (mm)	2.79 mm
PCB Locator	No
PCB Retention	None
PCB Thickness Recommended (in)	0.062 In
PCB Thickness Recommended (mm)	1.60 mm
Packaging Type	Bag
Pitch - Mating Interface (in)	0.100 In
Pitch - Mating Interface (mm)	2.54 mm
Plating min: Mating (µin)	15.2
Plating min: Mating (µm)	0.38
Plating min: Termination (µin)	80
Plating min: Termination (µm)	2
Polarized to Mating Part	No
Polarized to PCB	No
Shrouded	No
Stackable	Yes
Temperature Range - Operating	-40°C to +105°C

EU RoHS
ELV and RoHS Compliant
REACH SVHC
Contains SVHC: No
Halogen-Free Status
Not Reviewed

China RoHS

Need more information on product environmental compliance?

Email productcompliance@molex.com
For a multiple part number RoHS Certificate of Compliance, click here

Please visit the Contact Us section for any non-product compliance questions.

Search Parts in this Series
70280Series

Termination Interface: Style	Through Hole

Electrical

Current - Maximum per Contact	3A
Voltage - Maximum	250V

Solder Process Data

Lead-free Process Capability	SMC & Wave Capable (TH only)
Process Temperature max. C	260

Material Info

Old Part Number	70280-0054

Reference - Drawing Numbers

Product Specification	PS-70280
Sales Drawing	SDA-70280-0001-4000

This document was generated on 03/29/2010

PLEASE CHECK WWW.MOLEX.COM FOR LATEST PART INFORMATION

CKT. SIZE	DIM. A REF. (MM)	DIM. A REF. INCH	DIM. B REF. (MM)	DIM. B REF. INCH
4	(5.08)	.200	(2.54)	.100
6	(7.62)	.300	(5.08)	.200
8	(10.16)	.400	(7.62)	.300
10	(12.70)	.500	(10.16)	.400
12	(15.24)	.600	(12.70)	.500
14	(17.78)	.700	(15.24)	.600
16	(20.32)	.800	(17.78)	.700
18	(22.86)	.900	(20.32)	.800
20	(25.40)	1.000	(22.86)	.900
22	(27.94)	1.100	(25.40)	1.000
24	(30.48)	1.200	(27.94)	1.100
26	(33.02)	1.300	(30.48)	1.200
28	(35.56)	1.400	(33.02)	1.300
30	(38.10)	1.500	(35.56)	1.400
32	(40.64)	1.600	(38.10)	1.500
34	(43.18)	1.700	(40.64)	1.600
36	(45.72)	1.800	(43.18)	1.700
38	(48.26)	1.900	(45.72)	1.800
40	(50.80)	2.000	(48.26)	1.900
42	(53.34)	2.100	(50.80)	2.000
44	(55.88)	2.200	(53.34)	2.100
46	(58.42)	2.300	(55.88)	2.200
48	(60.96)	2.400	(58.42)	2.300
50	(63.50)	2.500	(60.96)	2.400
52	(66.04)	2.600	(63.50)	2.500
54	(68.58)	2.700	(66.04)	2.600
56	(71.12)	2.800	(68.58)	2.700
58	(73.66)	2.900	(71.12)	2.800
60	(76.20)	3.000	(73.66)	2.900
62	(78.74)	3.100	(76.20)	3.000
64	(81.28)	3.200	(78.74)	3.100
66	(83.82)	3.300	(81.28)	3.200
68	(86.36)	3.400	(83.82)	3.300
70	(88.90)	3.500	(86.36)	3.400
72	(91.44)	3.600	(88.90)	3.500
74	(93.98)	3.700	(91.44)	3.600
76	(96.52)	3.800	(93.98)	3.700
78	(99.06)	3.900	(96.52)	3.800
80	(101.06)	4.000	(99.06)	3.900
82	(104.14)	4.100	(101.06)	4.000
84	(106.68)	4.200	(104.14)	4.100
86	(109.22)	4.300	(106.68)	4.200
88	(111.76)	4.400	(109.22)	4.300
90	(114.30)	4.500	(111.76)	4.400
92	(116.84)	4.600	(114.30)	4.500
94	(119.38)	4.700	(116.84)	4.600
96	(121.92)	4.800	(119.38)	4.700
98	(124.46)	4.900	(121.92)	4.800
100	(127.00)	5.000	(124.46)	4.900

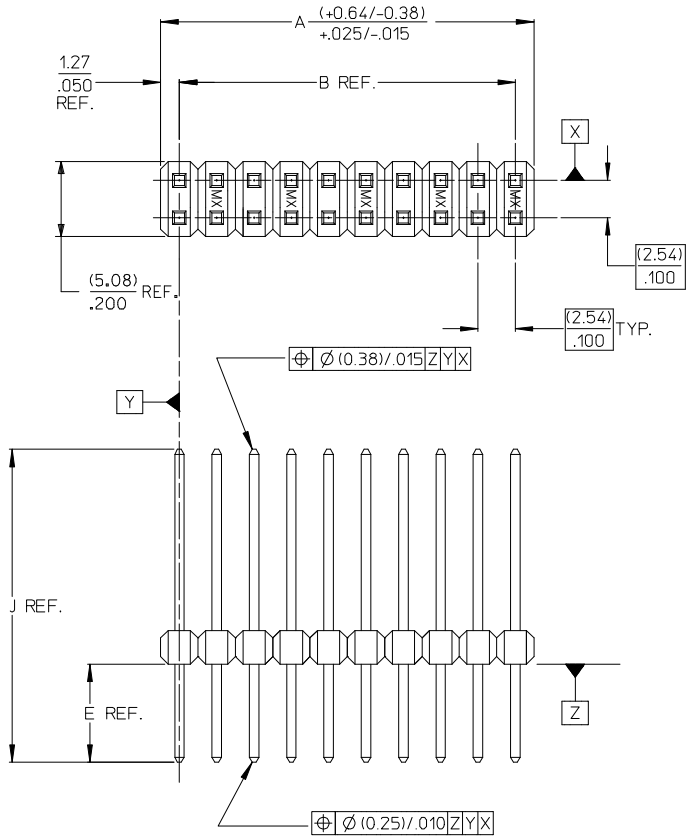

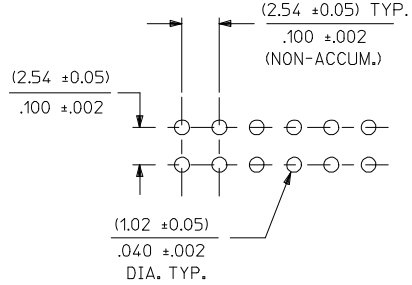

RECOMMENDED P.C. BOARD HOLE LAYOUT

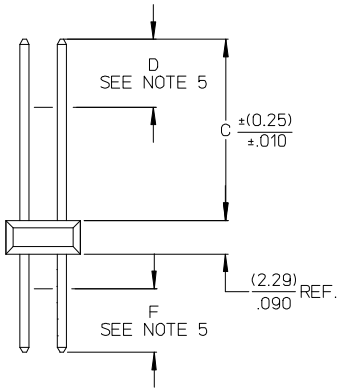

NOTES:

1. MATERIAL:
   PIN: COPPER ALLOY
   WAFER: GLASS FILLED LCP (LIQUID CRYSTAL POLYMER, UL 94V-0, COLOR: BLACK.
2. FINISH:

   TIN = (0.00380)/.000150 MINIMUM TIN PLATE OVER (0.00127)/.000050 MINIMUM NICKEL PLATE.
   15 GOLD = (0.00038)/.000015 MINIMUM GOLD PLATE IN SELECT AREA, (0.00190)/.000075 MINIMUM TIN PLATE IN SELECT AREA, OVER (0.00127)/.000050 MINIMUM NICKEL PLATE OVERALL.
   30 GOLD = (0.00076)/.000030 MINIMUM GOLD PLATE IN SELECT AREA, (0.00190)/.000075 MINIMUM TIN PLATE IN SELECT AREA, OVER (0.00127)/.000050 MINIMUM NICKEL PLATE OVERALL.
   GT15 = (0.00038)/.000015 MINIMUM GOLD PLATE IN SELECT AREA, (0.00254)/.000100 MINIMUM TIN PLATE IN SELECT AREA, OVER (0.00127)/.000050 MINIMUM NICKEL PLATE OVERALL.

3. PRODUCT SPECIFICATION NONE
4. PACKAGING INFORMATION: (UNLESS OTHERWISE NOTED IN TABLES) BULK PACK PER PK-70873-0353.
5. MEASURE POINT FOR PLATING THICKNESS.
6. FOR ASSEMBLIES WITH VOIDED PINS, REFER TO DRAWING NO. SDA-70280-5001-9999.
7. PIN PUSHOUT FORCE 3 POUNDS MINIMUM IN EITHER DIRECTION.
8. FOR ILLUSTRATION PURPOSES, 20 (DUAL 10) CIRCUIT SIZE IS SHOWN.
9. PINS MEET SOLDERABILITY SPEC SMES-152. ABSENCE OF PLATING PERMISSIBLE AT BANDOLIER PIN FAYING SURFACE. (APPROXIMATELY (0.64)/.025 INCH LONG BY (0.15)/.006 INCH WIDE AT 2 LOCATIONS)
10. PARTS CONFORM TO CLASS B OF COSMETIC SPECIFICATION PS-45499-002

* THE PRIMARY SHIPPING CARTON WILL BE LABELED "COMPLIANT TO RoHS DIRECTIVE 2002/95/EC AND ELV ANNEX II OF DIRECTIVE 2000/53/EC". CARTONS WITHOUT THIS LABEL MAY CONTAIN PRODUCT WITH LEAD PLATING.

SHT.	REV.
9	G6
8	G5
7	G3
6	G3
5	G3
4	G3
3	G3
2	G3
1	G6

ADD P/N 70280-1254 2008/03/31
EC NO: UCP2008-2306 2008/04/07
DRWN: JBELL
CH'KD: LSCHMIDT 2008/04/24
APPR: FSMITH
DESCRIPTION
G6
REV

QUALITY SYMBOLS
▼=0
▽=0

GENERAL TOLERANCES (UNLESS SPECIFIED)

	mm	INCH
4 PLACES	± ---	± ---
3 PLACES	± ---	± .005
2 PLACES	± 0.13	± .01
1 PLACE	± 0.25	± ---
ANGULAR ±1/2°		

DRAFT WHERE APPLICABLE MUST REMAIN WITHIN DIMENSIONS

DIMENSION STYLE: MM/IN
SCALE: 4:1
DESIGN UNITS: INCH
THIRD ANGLE PROJECTION

DRAWN BY: SMR DATE: 04/19/1993
CHECKED BY: DATE:
APPROVED BY: SMR DATE: 04/19/1993

TITLE: SALES ASSY-HIGH TEMP. DUAL ROW WAFER W/BREAK-OFF OPT. .025 SQ PINS

MOLEX INCORPORATED

MATERIAL NO.: SEE TABLE
DOCUMENT NO.: SDA-70280-0001-4000
SHEET NO.: 1 OF 9
SIZE: C

THIS DRAWING CONTAINS INFORMATION THAT IS PROPRIETARY TO MOLEX INCORPORATED AND SHOULD NOT BE USED WITHOUT WRITTEN PERMISSION

ENGINEERING NUMBER A-70280-	RELEASE FOR MANUFACTURE	E REF.	J REF.	C ±(0.25) .010	CONNECTOR END PLATING TYPE	CONNECTOR END PLATING D MEAS.	P.C. BOARD END PLATING TYPE	P.C. BOARD END PLATING F MEAS.	FOR PACKAGING INFORMATION, SEE NOTE 4, SHEET 1 (UNLESS OTHERWISE SPECIFIED BELOW)
-0001/-0040	R.F.M.	(2.72) .107	(11.10) .437	(6.10) .240	TIN	(2.54) .100	TIN	(1.27) .050	
-0041/-0080	R.F.M.	(2.72) .107	(11.10) .437	(6.10) .240	15 GOLD	(2.54) .100	TIN	(1.27) .050	
-0081/-0120	R.F.M.	(2.72) .107	(11.10) .437	(6.10) .240	30 GOLD	(2.54) .100	TIN	(1.27) .050	
-0121/-0160	R.F.M.	(2.79) .110	(13.21) .520	(8.13) .320	TIN	(4.57) .180	TIN	(1.27) .050	
-0161/-0200	R.F.M.	(2.79) .110	(13.21) .520	(8.13) .320	15 GOLD	(4.57) .180	TIN	(1.27) .050	
-0201/-0240	R.F.M.	(2.79) .110	(13.21) .520	(8.13) .320	30 GOLD	(4.57) .180	TIN	(1.27) .050	
-0241/-0280	R.F.M.	(3.94) .155	(12.32) .485	(6.10) .240	30 GOLD	(2.54) .100	TIN	(1.27) .050	

CKTS	EDP NUMBER	ENG NUMBER	EDP NUMBER	ENG NUMBER	EDP NUMBER	ENG NUMBER	EDP NUMBER	ENG NUMBER	EDP NUMBER	ENG NUMBER	EDP NUMBER	ENG NUMBER	EDP NUMBER	ENG NUMBER	CKTS
	N.A.	AX-70280-0001	N.A.	AX-70280-0041	N.A.	AX-70280-0081	N.A.	AX-70280-0121	N/A	AX-70280-0161	N/A	AX-70280-0201	N/A	AX-70280-0241	
04	010-89-7041	A-70280-0002	010-89-7042	A-70280-0042	010-89-7040	A-70280-0082	010-97-7045	A-70280-0122	010-97-7046	A-70280-0162	010-89-7043	A-70280-0202	010-87-9045	A-70280-0242	04
06	010-89-7061	A-70280-0003	010-89-7062	A-70280-0043	010-89-7060	A-70280-0083	010-97-7065	A-70280-0123	010-97-7066	A-70280-0163	010-89-7063	A-70280-0203	010-87-9065	A-70280-0243	06
08	010-89-7081	A-70280-0004	010-89-7082	A-70280-0044	010-89-7080	A-70280-0084	010-97-7085	A-70280-0124	010-97-7086	A-70280-0164	010-89-7083	A-70280-0204	010-87-9085	A-70280-0244	08
10	010-89-7101	A-70280-0005	010-89-7102	A-70280-0045	010-89-7100	A-70280-0085	010-97-7105	A-70280-0125	010-97-7106	A-70280-0165	010-89-7103	A-70280-0205	010-87-9105	A-70280-0245	10
12	010-89-7121	A-70280-0006	010-89-7122	A-70280-0046	010-89-7120	A-70280-0086	010-97-7125	A-70280-0126	010-97-7126	A-70280-0166	010-89-7123	A-70280-0206	010-87-9125	A-70280-0246	12
14	010-89-7141	A-70280-0007	010-89-7142	A-70280-0047	010-89-7140	A-70280-0087	010-97-7145	A-70280-0127	010-97-7146	A-70280-0167	010-89-7143	A-70280-0207	010-87-9145	A-70280-0247	14
16	010-89-7161	A-70280-0008	010-89-7162	A-70280-0048	010-89-7160	A-70280-0088	010-97-7165	A-70280-0128	010-97-7166	A-70280-0168	010-89-7163	A-70280-0208	010-87-9165	A-70280-0248	16
18	010-89-7181	A-70280-0009	010-89-7182	A-70280-0049	010-89-7180	A-70280-0089	010-97-7185	A-70280-0129	010-97-7186	A-70280-0169	010-89-7183	A-70280-0209	010-87-9185	A-70280-0249	18
20	010-89-7201	A-70280-0010	010-89-7202	A-70280-0050	010-89-7200	A-70280-0090	010-97-7205	A-70280-0130	010-97-7206	A-70280-0170	010-89-7203	A-70280-0210	010-87-9205	A-70280-0250	20
22	010-89-7221	A-70280-0011	010-89-7222	A-70280-0051	010-89-7220	A-70280-0091	010-97-7225	A-70280-0131	010-97-7226	A-70280-0171	010-89-7223	A-70280-0211	010-87-9225	A-70280-0251	22
24	010-89-7241	A-70280-0012	010-89-7242	A-70280-0052	010-89-7240	A-70280-0092	010-97-7245	A-70280-0132	010-97-7246	A-70280-0172	010-89-7243	A-70280-0212	010-87-9245	A-70280-0252	24
26	010-89-7261	A-70280-0013	010-89-7262	A-70280-0053	010-89-7260	A-70280-0093	010-97-7265	A-70280-0133	010-97-7266	A-70280-0173	010-89-7263	A-70280-0213	010-87-9265	A-70280-0253	26
28	010-89-7281	A-70280-0014	010-89-7282	A-70280-0054	010-89-7280	A-70280-0094	010-97-7285	A-70280-0134	010-97-7286	A-70280-0174	010-89-7283	A-70280-0214	010-87-9285	A-70280-0254	28
30	010-89-7301	A-70280-0015	010-89-7302	A-70280-0055	010-89-7300	A-70280-0095	010-97-7305	A-70280-0135	010-97-7306	A-70280-0175	010-89-7303	A-70280-0215	010-87-9305	A-70280-0255	30
32	010-89-7321	A-70280-0016	010-89-7322	A-70280-0056	010-89-7320	A-70280-0096	010-97-7325	A-70280-0136	010-97-7326	A-70280-0176	010-89-7323	A-70280-0216	010-87-9325	A-70280-0256	32
34	010-89-7341	A-70280-0017	010-89-7342	A-70280-0057	010-89-7340	A-70280-0097	010-97-7345	A-70280-0137	010-97-7346	A-70280-0177	010-89-7343	A-70280-0217	010-87-9345	A-70280-0257	34
36	010-89-7361	A-70280-0018	010-89-7362	A-70280-0058	010-89-7360	A-70280-0098	010-97-7365	A-70280-0138	010-97-7366	A-70280-0178	010-89-7363	A-70280-0218	010-87-9365	A-70280-0258	36
38	010-89-7381	A-70280-0019	010-89-7382	A-70280-0059	010-89-7380	A-70280-0099	010-97-7385	A-70280-0139	010-97-7386	A-70280-0179	010-89-7383	A-70280-0219	010-87-9385	A-70280-0259	38
40	010-89-7401	A-70280-0020	010-89-7402	A-70280-0060	010-89-7400	A-70280-0100	010-97-7405	A-70280-0140	010-97-7406	A-70280-0180	010-89-7403	A-70280-0220	010-87-9405	A-70280-0260	40
42	010-89-7421	A-70280-0021	010-89-7422	A-70280-0061	010-89-7420	A-70280-0101	010-97-7425	A-70280-0141	010-97-7426	A-70280-0181	010-89-7423	A-70280-0221	010-87-9425	A-70280-0261	42
44	010-89-7441	A-70280-0022	010-89-7442	A-70280-0062	010-89-7440	A-70280-0102	010-97-7445	A-70280-0142	010-97-7446	A-70280-0182	010-89-7443	A-70280-0222	010-87-9445	A-70280-0262	44
46	010-89-7461	A-70280-0023	010-89-7462	A-70280-0063	010-89-7460	A-70280-0103	010-97-7465	A-70280-0143	010-97-7466	A-70280-0183	010-89-7463	A-70280-0223	010-87-9465	A-70280-0263	46
48	010-89-7481	A-70280-0024	010-89-7482	A-70280-0064	010-89-7480	A-70280-0104	010-97-7485	A-70280-0144	010-97-7486	A-70280-0184	010-89-7483	A-70280-0224	010-87-9485	A-70280-0264	48
50	010-89-7501	A-70280-0025	010-89-7502	A-70280-0065	010-89-7500	A-70280-0105	010-97-7505	A-70280-0145	010-97-7506	A-70280-0185	010-89-7503	A-70280-0225	010-87-9505	A-70280-0265	50
52	010-89-7521	A-70280-0026	010-89-7522	A-70280-0066	010-89-7520	A-70280-0106	010-97-7525	A-70280-0146	010-97-7526	A-70280-0186	010-89-7523	A-70280-0226	010-87-9525	A-70280-0266	52
54	010-89-7541	A-70280-0027	010-89-7542	A-70280-0067	010-89-7540	A-70280-0107	010-97-7545	A-70280-0147	010-97-7546	A-70280-0187	010-89-7543	A-70280-0227	010-87-9545	A-70280-0267	54
56	010-89-7561	A-70280-0028	010-89-7562	A-70280-0068	010-89-7560	A-70280-0108	010-97-7565	A-70280-0148	010-97-7566	A-70280-0188	010-89-7563	A-70280-0228	010-87-9565	A-70280-0268	56
58	010-89-7581	A-70280-0029	010-89-7582	A-70280-0069	010-89-7580	A-70280-0109	010-97-7585	A-70280-0149	010-97-7586	A-70280-0189	010-89-7583	A-70280-0229	010-87-9585	A-70280-0269	58
60	010-89-7601	A-70280-0030	010-89-7602	A-70280-0070	010-89-7600	A-70280-0110	010-97-7605	A-70280-0150	010-97-7606	A-70280-0190	010-89-7603	A-70280-0230	010-87-9605	A-70280-0270	60
62	010-89-7621	A-70280-0031	010-89-7622	A-70280-0071	010-89-7620	A-70280-0111	010-97-7625	A-70280-0151	010-97-7626	A-70280-0191	010-89-7623	A-70280-0231	010-87-9625	A-70280-0271	62
64	010-89-7641	A-70280-0032	010-89-7642	A-70280-0072	010-89-7640	A-70280-0112	010-97-7645	A-70280-0152	010-97-7646	A-70280-0192	010-89-7643	A-70280-0232	010-87-9645	A-70280-0272	64
66	010-89-7661	A-70280-0033	010-89-7662	A-70280-0073	010-89-7660	A-70280-0113	010-97-7665	A-70280-0153	010-97-7666	A-70280-0193	010-89-7663	A-70280-0233	010-87-9665	A-70280-0273	66
68	010-89-7681	A-70280-0034	010-89-7682	A-70280-0074	010-89-7680	A-70280-0114	010-97-7685	A-70280-0154	010-97-7686	A-70280-0194	010-89-7683	A-70280-0234	010-87-9685	A-70280-0274	68
70	010-89-7701	A-70280-0035	010-89-7702	A-70280-0075	010-89-7700	A-70280-0115	010-97-7705	A-70280-0155	010-97-7706	A-70280-0195	010-89-7703	A-70280-0235	010-87-9705	A-70280-0275	70
72	010-89-7721	A-70280-0036	010-89-7722	A-70280-0076	010-89-7720	A-70280-0116	010-97-7725	A-70280-0156	010-97-7726	A-70280-0196	010-89-7723	A-70280-0236	010-87-9725	A-70280-0276	72
74	010-89-7741	A-70280-0037	010-89-7742	A-70280-0077	010-89-7740	A-70280-0117	010-97-7745	A-70280-0157	010-97-7746	A-70280-0197	010-89-7743	A-70280-0237	010-87-9745	A-70280-0277	74
76	010-89-7761	A-70280-0038	010-89-7762	A-70280-0078	010-89-7760	A-70280-0118	010-97-7765	A-70280-0158	010-97-7766	A-70280-0198	010-89-7763	A-70280-0238	010-87-9765	A-70280-0278	76
78	010-89-7781	A-70280-0039	010-89-7782	A-70280-0079	010-89-7780	A-70280-0119	010-97-7785	A-70280-0159	010-97-7786	A-70280-0199	010-89-7783	A-70280-0239	010-87-9785	A-70280-0279	78
80	010-89-7801	A-70280-0040	010-89-7802	A-70280-0080	010-89-7800	A-70280-0120	010-97-7805	A-70280-0160	010-97-7806	A-70280-0200	010-89-7803	A-70280-0240	010-87-9805	A-70280-0280	80

UPDATE DIMENSIONS
EC NO: UCP2007-1440
DRWN:PRIDDER 2006/12/18
CHKD:ADERR 2006/12/18
APPR:FSMITH 2007/01/10
DESCRIPTION
REV
G3

QUALITY SYMBOLS
▼=0
▽=0

GENERAL TOLERANCES (UNLESS SPECIFIED)

	mm	INCH
4 PLACES	± ---	± ---
3 PLACES	± ---	± ---
2 PLACES	± ---	± ---
1 PLACE	± ---	± ---
ANGULAR ±1/2°		

DRAFT WHERE APPLICABLE MUST REMAIN WITHIN DIMENSIONS

DIMENSION STYLE: MM/IN
SCALE: ---
DESIGN UNITS: INCH
THIRD ANGLE PROJECTION

DRAWN BY: SMR DATE: 1993/04/19
CHECKED BY: DATE:
APPROVED BY: SMR DATE: 1993/04/19

TITLE: SALES ASSY-HIGH TEMP. DUAL ROW WAFER W/BREAK-OFF OPTION, .025 SQ PINS

MOLEX INCORPORATED

MATERIAL NO.: SEE CHART
DOCUMENT NO.: SDA-70280-0001-4000
SHEET NO.: 2 OF 8
SIZE: C

THIS DRAWING CONTAINS INFORMATION THAT IS PROPRIETARY TO MOLEX INCORPORATED AND SHOULD NOT BE USED WITHOUT WRITTEN PERMISSION