molex
one company > a world of innovation

This document was generated on 05/21/2010

PLEASE CHECK WWW.MOLEX.COM FOR LATEST PART INFORMATION

Part Number: 0010101023
Status: Active
Overview: kk
Description: 5.08mm (.200") Pitch KK® PC Board Connector, Top Entry Mount Style C, 1.0µm (40µ") Tin (Sn), 2 Circuits

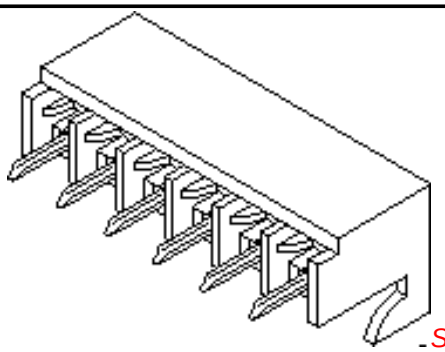

-Series
image - Reference only

Documents:

3D Model
Drawing (PDF)
Product Specification PS-99020-0087 (PDF)
RoHS Certificate of Compliance (PDF)

Agency Certification

CSA	LR19980
UL	E29179

General

Product Family	PCB Receptacles
Series	3002
Application	Board-to-Board
Overview	kk
Product Name	KK®

Physical

Circuits (Loaded)	2
Color - Resin	Natural
Durability (mating cycles max)	25
Flammability	94V-2
Glow-Wire Compliant	No
Material - Metal	Phosphor Bronze
Material - Plating Mating	Tin
Material - Plating Termination	Tin
Material - Resin	Nylon
Number of Rows	1
Orientation	Vertical
PC Tail Length (in)	0.110 In
PC Tail Length (mm)	2.79 mm
PCB Locator	No
PCB Retention	None
PCB Thickness Recommended (in)	0.062 In
PCB Thickness Recommended (mm)	1.60 mm
Packaging Type	Tray
Pitch - Mating Interface (in)	0.200 In
Pitch - Mating Interface (mm)	5.08 mm
Plating min: Mating (µin)	40.00
Plating min: Mating (µm)	1.000
Plating min: Termination (µin)	40.00
Plating min: Termination (µm)	1.00
Polarized to PCB	No
Temperature Range - Operating	0°C to +75°C
Termination Interface: Style	Through Hole

Electrical

Current - Maximum per Contact	7A
Voltage - Maximum	250V

Solder Process Data

Lead-free Process Capability	Wave Capable (TH only)

EU RoHS
ELV and RoHS Compliant
REACH SVHC
Not Reviewed
Halogen-Free Status
Halogen-Free

China RoHS

Need more information on product environmental compliance?

Email productcompliance@molex.com
For a multiple part number RoHS Certificate of Compliance, click here

Please visit the Contact Us section for any non-product compliance questions.

Search Parts in this Series
3002Series

Mates With
3003 , 2599 , 3008

Material Info

Old Part Number	300202C

Reference - Drawing Numbers

Product Specification	PS-99020-0087
Sales Drawing	SDAE-3002-NC-*

This document was generated on 05/21/2010

PLEASE CHECK WWW.MOLEX.COM FOR LATEST PART INFORMATION

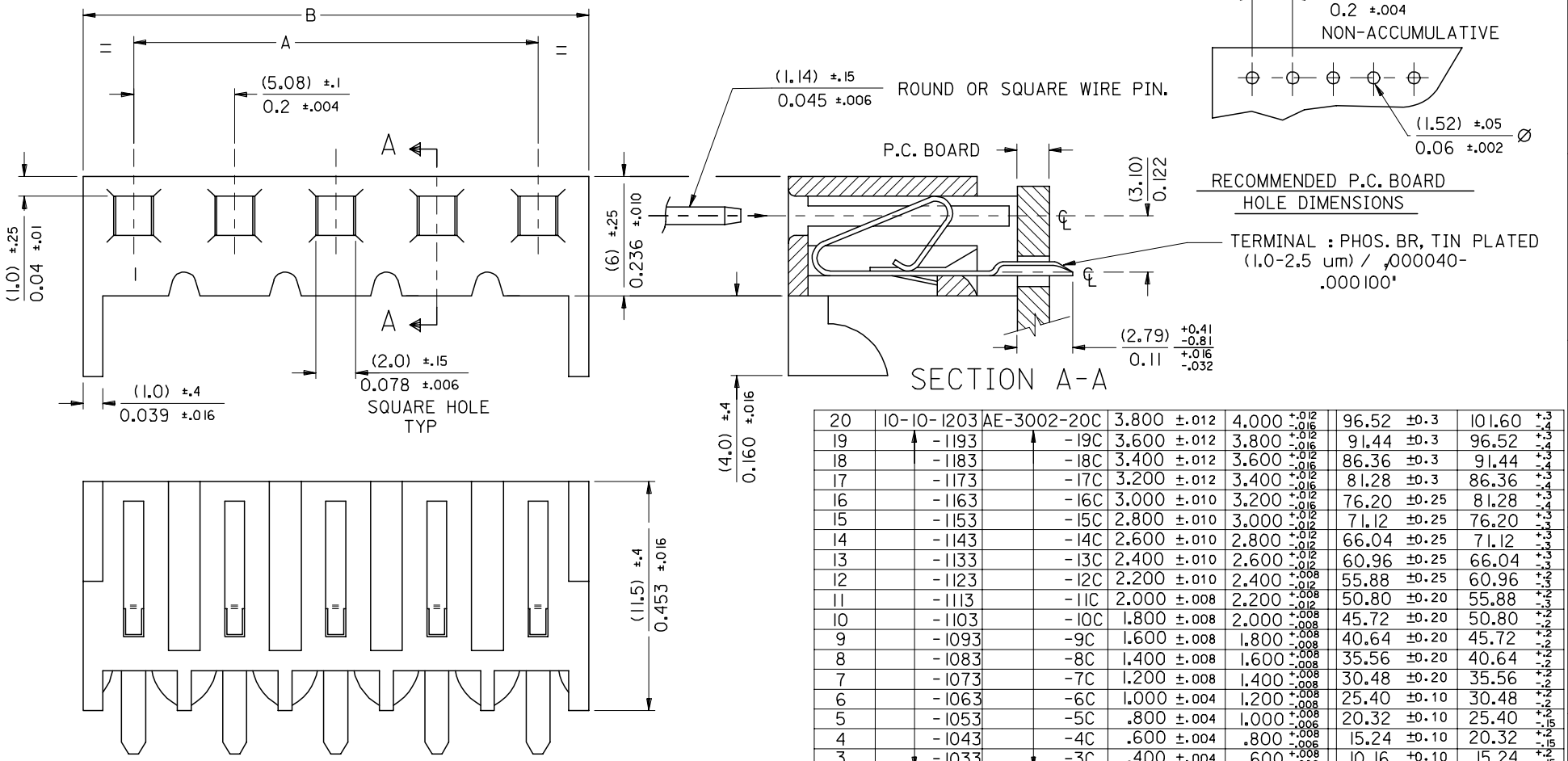

No OF CIRCUITS	PART No.	ENG. No.	ENGLISH A	ENGLISH B	METRIC A	METRIC B
20	10-10-1203	AE-3002-20C	3.800 ±.012	4.000 +.012 -.016	96.52 ±0.3	101.60 +.3 -.4
19	-1193	-19C	3.600 ±.012	3.800 +.012 -.016	91.44 ±0.3	96.52 +.3 -.4
18	-1183	-18C	3.400 ±.012	3.600 +.012 -.016	86.36 ±0.3	91.44 +.3 -.4
17	-1173	-17C	3.200 ±.012	3.400 +.012 -.016	81.28 ±0.3	86.36 +.3 -.4
16	-1163	-16C	3.000 ±.010	3.200 +.012 -.016	76.20 ±0.25	81.28 +.3 -.4
15	-1153	-15C	2.800 ±.010	3.000 +.012 -.012	71.12 ±0.25	76.20 +.3 -.3
14	-1143	-14C	2.600 ±.010	2.800 +.012 -.012	66.04 ±0.25	71.12 +.3 -.3
13	-1133	-13C	2.400 ±.010	2.600 +.012 -.012	60.96 ±0.25	66.04 +.3 -.3
12	-1123	-12C	2.200 ±.010	2.400 +.008 -.012	55.88 ±0.25	60.96 +.2 -.3
11	-1113	-11C	2.000 ±.008	2.200 +.008 -.012	50.80 ±0.20	55.88 +.2 -.3
10	-1103	-10C	1.800 ±.008	2.000 +.008 -.008	45.72 ±0.20	50.80 +.2 -.2
9	-1093	-9C	1.600 ±.008	1.800 +.008 -.008	40.64 ±0.20	45.72 +.2 -.2
8	-1083	-8C	1.400 ±.008	1.600 +.008 -.008	35.56 ±0.20	40.64 +.2 -.2
7	-1073	-7C	1.200 ±.008	1.400 +.008 -.008	30.48 ±0.20	35.56 +.2 -.2
6	-1063	-6C	1.000 ±.004	1.200 +.008 -.008	25.40 ±0.10	30.48 +.2 -.2
5	-1053	-5C	.800 ±.004	1.000 +.008 -.006	20.32 ±0.10	25.40 +.2 -.15
4	-1043	-4C	.600 ±.004	.800 +.008 -.006	15.24 ±0.10	20.32 +.2 -.15
3	-1033	-3C	.400 ±.004	.600 +.008 -.006	10.16 ±0.10	15.24 +.2 -.15
2	10-10-1023	AE-3002-2C	.200 ±.004	.400 +.008 -.006	5.08 ±0.10	10.16 +.2 -.15

NOTE :

1. DIMENSIONS SHOWN (MILLIMETERS) / INCHES
2. HOOKS AVAILABLE ON ENDS ONLY
3. THIS PART CONFORMS TO MOLEX PROD.SPEC.99020-0087

REVISION UPDATE
EC NO: E2005-0200 2004/10/05
DRWN:GMCSWEEN 2004/10/05
CH'KD:DMORIART 2004/10/08
APPR: JDENNEHY
DESCRIPTION
REV

QUALITY SYMBOLS
▼=0
▽=0

GENERAL TOLERANCES (UNLESS SPECIFIED)

	mm	INCH
4 PLACES	± ---	± ---
3 PLACES	± 0.25	± .010
2 PLACES	± 0.35	± .014
1 PLACE	± ---	± ---
ANGULAR ±1/2°		

DRAFT WHERE APPLICABLE MUST REMAIN WITHIN DIMENSIONS

DIMENSION STYLE: MM/IN
SCALE: 5:1
DESIGN UNITS: METRIC
THIRD ANGLE PROJECTION

DRAWN BY: P MOORE DATE: 1998/09/14
CHECKED BY: MGOONEY DATE: 1999/03/08
APPROVED BY: MWILHITE DATE: 1999/03/08
MATERIAL NO.: SEE CHART

TITLE: KONEKTCON & P.C. TAIL TERMINAL ASSEMBLY

MOLEX INCORPORATED

DOCUMENT NO.: SDAE-3002-NC-*
SHEET NO.: 1 OF 2

SIZE A3

THIS DRAWING CONTAINS INFORMATION THAT IS PROPRIETARY TO MOLEX INCORPORATED AND SHOULD NOT BE USED WITHOUT WRITTEN PERMISSION