This document was generated on 06/07/2010

PLEASE CHECK WWW.MOLEX.COM FOR LATEST PART INFORMATION

Part Number: 0010051057
Status: Active
Overview: kk
Description: 5.08mm (.200") Pitch PC Board Connector, Top Entry, 5 Circuits

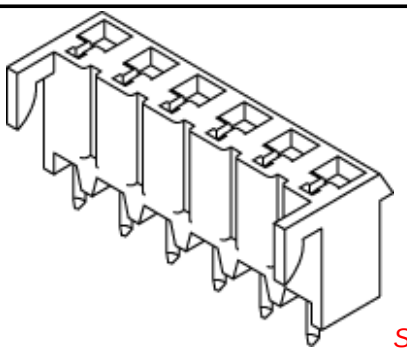

Series image - Reference only

Documents:

3D Model
Drawing (PDF)
Product Specification PS-2767-004 (PDF)
Product Specification PS-2767-012 (PDF)
RoHS Certificate of Compliance (PDF)

Agency Certification

CSA	LR19980
UL	E29179

General

Product Family	PCB Receptacles
Series	2767
Application	Board-to-Board
Overview	kk
Product Name	KK®

Physical

Circuits (Loaded)	5
Color - Resin	Natural
Flammability	94V-2
Glow-Wire Compliant	No
Material - Metal	Brass
Material - Plating Mating	Tin-Lead
Material - Plating Termination	Tin
Material - Resin	Nylon
Number of Rows	1
Orientation	Vertical
PC Tail Length (in)	0.126 In
PC Tail Length (mm)	3.20 mm
PCB Locator	No
PCB Retention	None
PCB Thickness Recommended (in)	0.062 In
PCB Thickness Recommended (mm)	1.60 mm
Packaging Type	Bag
Pitch - Mating Interface (in)	0.200 In
Pitch - Mating Interface (mm)	5.08 mm
Plating min: Mating (µin)	35
Plating min: Mating (µm)	0.88
Plating min: Termination (µin)	35
Plating min: Termination (µm)	0.88
Polarized to PCB	No
Temperature Range - Operating	-40°C to +105°C
Termination Interface: Style	Through Hole

Electrical

Current - Maximum per Contact	7A
Voltage - Maximum	250V

Material Info

Old Part Number	2767-5CH

Reference - Drawing Numbers

EU RoHS
ELV and RoHS Compliant
REACH SVHC
Contains SVHC: No
Halogen-Free Status
Not Reviewed

China RoHS

Need more information on product environmental compliance?

Email productcompliance@molex.com
For a multiple part number RoHS Certificate of Compliance, click here

Please visit the Contact Us section for any non-product compliance questions.

Search Parts in this Series
2767Series

Mates With
5279na

Product Specification	PS-2767-004, PS-2767-012
Sales Drawing	SD-2767-004

This document was generated on 06/07/2010

PLEASE CHECK WWW.MOLEX.COM FOR LATEST PART INFORMATION

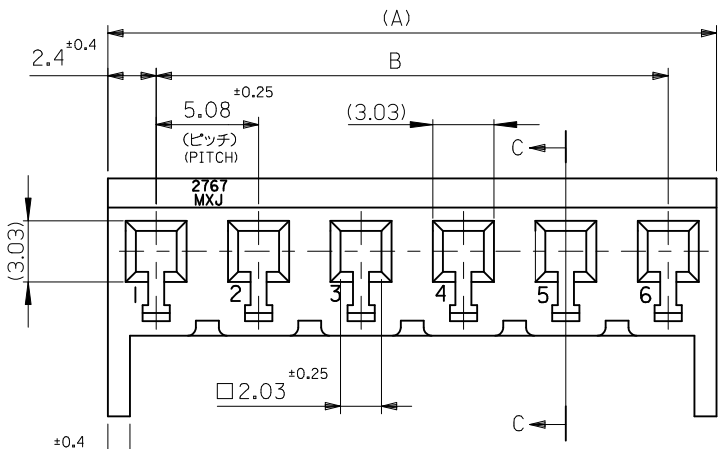

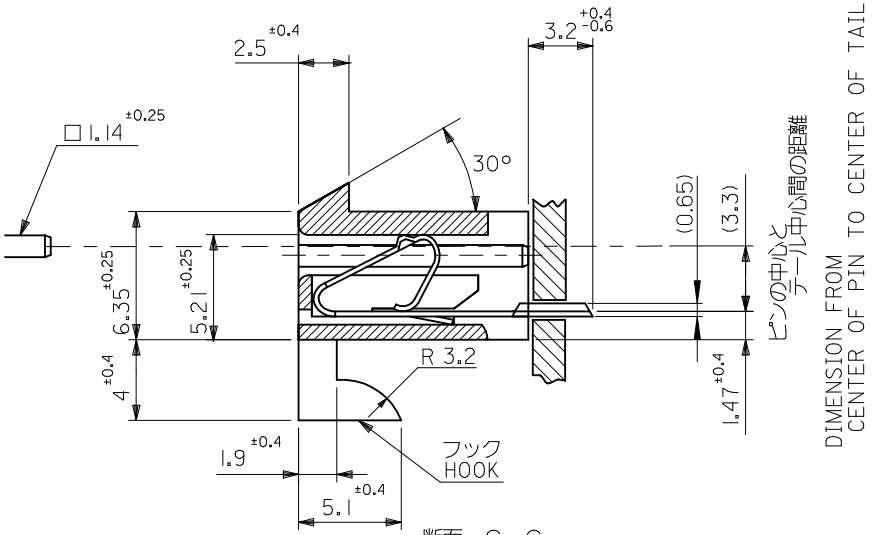

断面 C－C
SECT. C-C

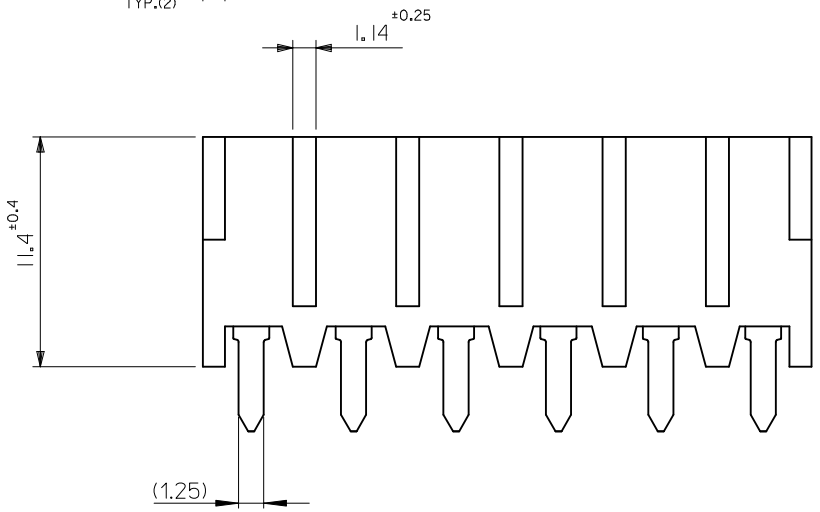

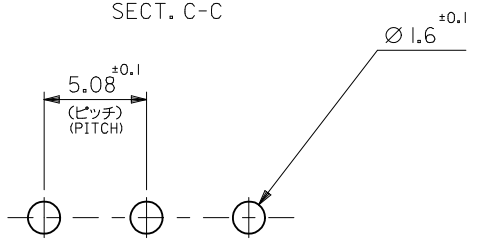

基板取付穴推奨寸法
RECOMMENDED PC BOARD HOLE DIMENSION

25.4±0.2	30.2	10-05-1067	2767-6CH	6
20.32±0.2	25.12	10-05-1057	2767-5CH	5
15.24±0.15	20.04	10-05-1047	2767-4CH	4
10.16±0.15	14.96	10-05-1037	2767-3CH	3
B	(A)	EDP.NO.	ENG.NO.	極数 NO. OF CKTS

注記 NOTES

1. 材質 MATERIAL
   ハウジング : NYLON66 , 94V-2
   HOUSING : NYLON66 , 94V-2
   ターミナル : 黄銅、銅下付錫メッキ
   TERMINAL : BRASS、TIN OVER COPPER PLATING
2. ( )内寸法は参考値
   ( )DIMENSION IS FOR REFERENCE

REVISED
E EC NO: J2010-2152 2010/05/26
DRWN:RTSURUOKA 2010/06/01
CH'KD:THARUYAMA 2010/06/04
APPR:HHIRATA
DESCRIPTION
REV

GENERAL TOLERANCES (UNLESS SPECIFIED)

10 UNDER	±---
10 OVER 30 UNDER	±---
30 OVER	±---
ANGULAR ±--- °	

DRAFT WHERE APPLICABLE MUST REMAIN WITHIN DIMENSIONS

DIMENSION STYLE	MM ONLY
SCALE	4:1
DESIGN UNITS	METRIC
	THIRD ANGLE PROJECTION
DRAWN BY / DATE	H.IIJIMA 1996/05/23
CHECKED BY / DATE	M.FUKUSHIMA 1996/05/23
APPROVED BY / DATE	MENOMOTO 1996/05/23
TITLE	KK5.08 REC HSG ASSY
	MOLEX INCORPORATED
MATERIAL NO.	SEE CHART
DOCUMENT NO.	SD-2767-004
SHEET NO.	1 OF 1
SIZE	A3

THIS DRAWING CONTAINS INFORMATION THAT IS PROPRIETARY TO MOLEX INCORPORATED AND SHOULD NOT BE USED WITHOUT WRITTEN PERMISSION