Integrated Transceiver Modules for ZigBee / 802.15.4 (2.4 GHz)

Development Kit Available

FEATURES

- 100mW output power
- Long range: 4000 feet
- Miniature footprint: 0.9” x 1.63”
- Integrated PCB F antenna or U.FL connector for external antenna
- Worldwide acceptance: FCC, IC and CE
- Powerful Texas Instruments 256k MSP430 with 802.15.4 MAC or ZigBee Stack
- LSR serial interface based on 802.15.4 MAC
- Low power operation
- RoHS compliant
- Streamlined development with LSR design services.
- License options available to purchase design or integrate design.

APPLICATIONS

- Security and Lighting Control
- HVAC Control
- Sensor Networks
- Medical
- Smart Energy

DESCRIPTION

The ProFLEX01-R2 module is a high performance 2.4GHz IEEE 802.15.4 radio (CC2520 & CC2591) and microcontroller (MSP430F5437A) in a cost effective, pre-certified footprint.



The module comes preloaded with the TI MAC-Stack that can be used with the LSR host serial interface.

Full debug and programming capabilities are included to develop custom applications. Easily load the TI ZigBee stack or MAC onto the module and create your own network.

Need to get to market quickly? Not an expert in 802.15.4 or ZigBee? Need a custom antenna? Would you like to own the design? Would you like a custom design? Not quite sure what you need? Do you need help with your host board? LSR Design Services will be happy to develop custom hardware or software, integrate the design, or license the design so you can manufacture yourself. Contact us at sales@lsr.com or call us at 262-375-4400.

ORDERING INFORMATION

Order Number	Description
450-0075	ProFLEX01-R2 Module with PCB F antenna (Tray) SPQ = 25
450-0076	ProFLEX01-R2 Module with U.FL connector for external antenna (Tray) SPQ = 250
450-0004	ProFLEX01-R2 Development Kit with F antenna

Table 1 Orderable ProFLEX01-R2 Model Numbers

The information in this document is subject to change without notice.

Copyright © 2012-2018 LSR

MODULE ACCESSORIES

	Order Number	Description
	**001-0001**	2.4 GHz Dipole Antenna with Reverse Polarity SMA Connector
	**001-0010**	2.4 GHz Waterproof Dipole Antenna with Reverse Polarity SMA Connector
	**080-0001**	U.FL to Reverse Polarity SMA Bulkhead Cable 105mm
	**080-0013**	Waterproof U.FL to Reverse Polarity SMA Bulkhead Cable, O-Ring Seal, 105mm
	**080-0014**	Waterproof U.FL to Reverse Polarity SMA Bulkhead Cable, O-Ring Seal, 210mm

Copyright © 2012-2018 LSR

BLOCK DIAGRAM

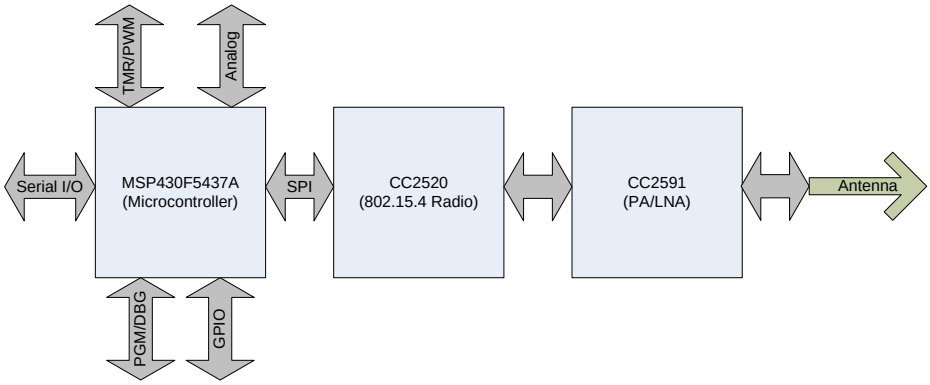

Figure 1 ProFLEX01-R2 Module Block Diagram – High-Level

DEVELOPMENT KIT

The ProFLEX01-R2 Development Kit can be used out of the box to evaluate RF range performance with the simple press of a button.

Users interested in further investigating the performance and capabilities of the ProFLEX01-R2 Module can use the ProFLEX01-R2 Test Tool. This PC-based software can demonstrate just how easy it is to send & receive data, collect performance data, change channels, power levels, or addresses using the LSR Serial Host Protocol with another microcontroller.

More advanced users can use the development board to create and debug their own software for the ProFLEX01-R2 module using the 802.15.4 MAC or ZigBee stack from TI.

Part Number	Description
450-0004	ProFLEX01-R2 Development Kit with F Antenna

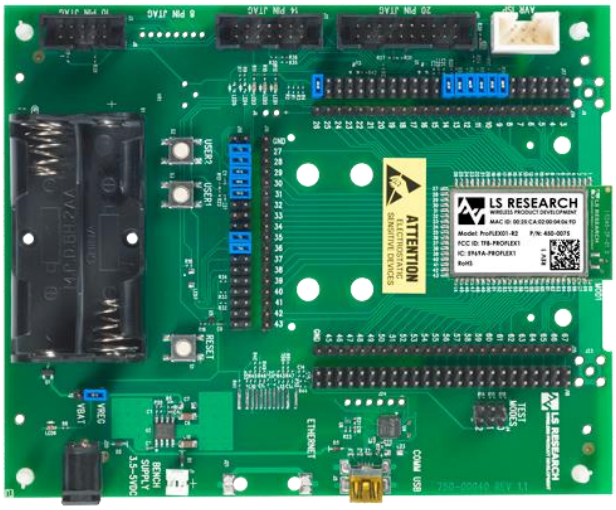

Figure 2 ProFLEX01-R2 Development Board

Kit Contents

- ProFLEX01-R2 Development Board with ProFLEX01-R2 Series Transceiver Module with F antenna (x2)
- USB Cable (x2)
- AA Batteries (x4)
- Quick Start Guide

Copyright © 2012-2018 LSR

TABLE OF CONTENTS

Development Kit Available 1
FEATURES 1
APPLICATIONS 1
DESCRIPTION 1
ORDERING INFORMATION 1
MODULE ACCESSORIES 2
BLOCK DIAGRAM 3
DEVELOPMENT KIT 3
Kit Contents 3
MODULE PINOUT AND PIN DESCRIPTIONS 6
MODULE OVERVIEW 11
Microcontroller 11
Radio 12
PA/LNA 14
Antenna Options 15
MODES OF OPERATION 16
Host Microcontroller 16
Software Stacks 17
DEVELOPMENT TOOLS 18
TI MSP-FET430UIF 18
IAR Embedded Workbench for MSP430 18
ELECTRICAL SPECIFICATIONS 19
Absolute Maximum Ratings 19
Recommended Operating Conditions 19
General Characteristics 20
RF Characteristics 21
SOLDERING RECOMMENDATIONS 24
Recommended Reflow Profile for Lead Free Solder 24

 Copyright © 2012-2018 LSR

CLEANING 25
OPTICAL INSPECTION 25
REWORK 25
SHIPPING, HANDLING, AND STORAGE 25
Shipping 25
Handling 25
Moisture Sensitivity Level (MSL) 25
Storage 25
Repeating Reflow Soldering 26
AGENCY STATEMENTS 27
Agency Certifications 27
Federal Communication Commission Interference Statement 27
Industry Canada Statements 28
OEM Responsibilities to comply with FCC and Industry Canada Regulations 29
End Product Labelling 30
EUROPE 31
CE Notice 31
Declaration of Conformity (DoC) 31
ANTENNA INFORMATION 32
Dipole Antenna 001-0001 32
F Antenna 32
MECHANICAL DATA 41
PCB Footprint 41
General Module Dimensions 42
COMPATIBILITY 43
MODULE REVISION HISTORY 44
Rev 1 44
Rev 2 44
Rev 3 45
Rev 4 45
CONTACTING LSR 46

 Copyright © 2012-2018 LSR

MODULE PINOUT AND PIN DESCRIPTIONS

MCU#				MCU#
-	GND	1	GND	-
-	GND	2	GND	-
-	GND	3	GND	-
-	NC	4	NC	-
-	NC	5	NC	-
-	NC	6	NC	-
-	NC	7	NC	-
-	NC	8	NC	-
74	JTAG TMS	9	P5.6	56
73	JTAG TDI	10	P5.7	57
75	JTAG TCK	11	P3.6	41
72	JTAG TDO	12	P5.5	55
71	TEST	13	P3.7	42
76	nRESET	14	P5.4	54
9	P5.0	15	P2.4	29
10	P5.1	16	P2.3	28
77	P6.0	17	P2.2	27
78	P6.1	18	P2.1	26
79	P6.2	19	P2.0	25
80	P6.3	20	P1.1	18
1	P6.4	21	P1.0	17
2	P6.5	22	P7.7	8
3	P6.6	23	P1.2	19
4	P6.7	24	P8.0	60
5	P7.4	25	P8.1	61
-	VCC - 3V3DC	26	GND	-

Texas Instruments
MSP430F5437A

27	28	29	30	31	32	33	34	35	36	37	38	39	40	41	42	43
P4.7	P4.6	P4.5	P4.4	P4.3	P4.2	P4.1	P4.0	P3.4/UART TX	P3.5/UART RX	P7.2/CTS	P7.3	P8.6	P8.5	P8.4	P8.3	P8.2
53	52	48	47	46	45	44	43	39	40	58	59	66	65	64	63	62

MCU#

Figure 3 Module Pinout

Copyright © 2012-2018 LSR

Module Pin	Name	MCU Pin	Type	Description
1	GND	N/A	GND	Ground
2	GND	N/A	GND	Ground
3	GND	N/A	GND	Ground
4	NC	N/A	NC	No Connect
5	NC	N/A	NC	No Connect
6	NC	N/A	NC	No Connect
7	NC	N/A	NC	No Connect
8	NC	N/A	NC	No Connect
9	JTAG TMS	74	I/O	General-purpose digital I/O Test mode select
10	JTAG TDI	73	I/O	General-purpose digital I/O Test data input or test clock input
11	JTAG TCK	75	I/O	General-purpose digital I/O Test clock
12	JTAG TDO	72	I/O	General-purpose digital I/O Test data output port
13	TEST	71	I	Test mode pin – select digital I/O on JTAG pins Spy-bi-wire input clock
14	nRESET	76	I/O	Reset input active low Non-maskable interrupt input Spy-bi-wire data input/output
15	P5.0	9	I/O	General-purpose digital I/O Output of reference voltage to the ADC Input for an external reference voltage to the ADC
16	P5.1	10	I/O	General-purpose digital I/O Negative terminal for the ADC's reference voltage for both sources, the internal reference voltage, or an external applied reference voltage
17	P6.0	77	I/O	General-purpose digital I/O Analog input
18	P6.1	78	I/O	General-purpose digital I/O Analog input
19	P6.2	79	I/O	General-purpose digital I/O Analog input
20	P6.3	80	I/O	General-purpose digital I/O Analog input
21	P6.4	1	I/O	General-purpose digital I/O Analog input

Copyright © 2012-2018 LSR

Module Pin	Name	MCU Pin	Type	Description
22	P6.5	2	I/O	General-purpose digital I/O Analog input
23	P6.6	3	I/O	General-purpose digital I/O Analog input
24	P6.7	4	I/O	General-purpose digital I/O Analog input
25	P7.4	5	I/O	General-purpose digital I/O Analog input
26	VCC - 3V3DC	VCC	VCC	Supply Voltage
27	P4.7	53	I/O	General-purpose digital I/O Timer_B7 clock input SMCLK output
28	P4.6	52	I/O	General-purpose digital I/O Timer_B7 capture CCR6: CCI6A/CCI6B input, compare: Out6 output
29	P4.5	48	I/O	General-purpose digital I/O Timer_B7 capture CCR5: CCI5A/CCI5B input, compare: Out5 output
30	P4.4	47	I/O	General-purpose digital I/O Timer_B7 capture CCR4: CCI4A/CCI4B input, compare: Out4 output
31	P4.3	46	I/O	General-purpose digital I/O Timer_B7 capture CCR3: CCI3A/CCI3B input, compare: Out3 output
32	P4.2	45	I/O	General-purpose digital I/O Timer_B7 capture CCR2: CCI2A/CCI2B input, compare: Out2 output
33	P4.1	44	I/O	General-purpose digital I/O Timer_B7 capture CCR1: CCI1A/CCI1B input, compare: Out1 output
34	P4.0	43	I/O	General-purpose digital I/O Timer_B7 capture CCR0: CCI0A/CCI0B input, compare: Out0 output
35	P3.4/UART TX	39	I/O	General-purpose digital I/O Transmit data – USCI_A0 UART mode Slave in, master out – USCI_A0 SPI mode
36	P3.5/UART RX	40	I/O	General-purpose digital I/O Receive data – USCI_A0 UART mode Slave out, master in – USCI_A0 SPI mode
37	P7.2	58	I/O	General-purpose digital I/O Switch all PWM outputs high impedance – Timer_B SVM output
38	P7.3	59	I/O	General-purpose digital I/O Timer1_A3 CCR2 capture: CCI2B input, compare: Out2 output
39	P8.6	66	I/O	General-purpose digital I/O Timer1_A3 CCR1 capture: CCI1B input, compare: Out1 output

Copyright © 2012-2018 LSR

Module Pin	Name	MCU Pin	Type	Description
40	P8.5	65	I/O	General-purpose digital I/O Timer1_A3 CCR0 capture: CCI0B input, compare: Out0 output
41	P8.4	64	I/O	General-purpose digital I/O Timer0_A5 CCR4 capture: CCI4B input, compare: Out4 output
42	P8.3	63	I/O	General-purpose digital I/O Timer0_A5 CCR3 capture: CCI3B input, compare: Out3 output
43	P8.2	62	I/O	General-purpose digital I/O Timer0_A5 CCR2 capture: CCI2B input, compare: Out2 output
44	GND	N/A	GND	Ground
45	P8.1	61	I/O	General-purpose digital I/O Timer0_A5 CCR1 capture: CCI1B input, compare: Out1 output
46	P8.0	60	I/O	General-purpose digital I/O Timer0_A5 CCR0 capture: CCI0B input, compare: Out0 output
47	P1.2	19	I/O	General-purpose digital I/O with port interrupt TA0 CCR1 capture: CCI1A input, compare: Out1 output BSL receive input
48	P7.7	8	I/O	General-purpose digital I/O Analog input
49	P1.0	17	I/O	General-purpose digital I/O with port interrupt Timer0_A5 clock signal TACLK input ACLK output
50	P1.1	18	I/O	General-purpose digital I/O with port interrupt Timer0_A5 CCR0 capture: CCI0A input, compare: Out0 output BSL transmit output
51	P2.0	25	I/O	General-purpose digital I/O with port interrupt Timer1_A3 clock signal TA1CLK input MCLK output
52	P2.1	26	I/O	General-purpose digital I/O with port interrupt Timer1_A3 CCR0 capture: CCI0A input, compare: Out0 output
53	P2.2	27	I/O	General-purpose digital I/O with port interrupt Timer1_A3 CCR1 capture: CCI1A input, compare: Out1 output
54	P2.3	28	I/O	General-purpose digital I/O with port interrupt Timer1_A3 CCR2 capture: CCI2A input, compare: Out2 output
55	P2.4	29	I/O	General-purpose digital I/O with port interrupt RTCCLK output
56	P5.4	54	I/O	General-purpose digital I/O Slave out, master in – USCI_B1 SPI mode I2C clock – USCI_B1 I2C mode

Copyright © 2012-2018 LSR

Module Pin	Name	MCU Pin	Type	Description
57	P3.7	42	I/O	General-purpose digital I/O Slave in, master out – USCI_B1 SPI mode I2C data – USCI_B1 I2C mode
58	P5.5	55	I/O	General-purpose digital I/O Clock signal input – USCI_B1 SPI slave mode Clock signal output – USCI_B1 SPI master mode Slave transmit enable – USCI_A1 SPI mode
59	P3.6	41	I/O	General-purpose digital I/O Slave transmit enable – USCI_B1 SPI mode Clock signal input – USCI_A1 SPI slave mode Clock signal output – USCI_A1 SPI master mode
60	P5.7	57	I/O	General-purpose digital I/O Receive data – USCI_A1 UART mode Slave out, master in – USCI_A1 SPI mode
61	P5.6	56	I/O	General-purpose digital I/O Transmit data – USCI_A1 UART mode Slave in, master out – USCI_A1 SPI mode
62	NC	N/A	NC	No Connect
63	NC	N/A	NC	No Connect
64	NC	N/A	NC	No Connect
65	NC	N/A	NC	No Connect
66	NC	N/A	NC	No Connect
67	GND	N/A	GND	Ground
68	GND	N/A	GND	Ground
69	GND	N/A	GND	Ground

Table 2 ProFLEX01-R2 Module Pin Descriptions

Copyright © 2012-2018 LSR

MODULE OVERVIEW

Figure 4 shows the internal interconnects of the ICs on the ProFLEX01-R2 module. Consult the respective IC datasheets for details, or contact LSR sales to purchase the ProFLEX01-R2 module schematics as part of LSR's ModFLEX™ design program. For a high-level block diagram of the ProFLEX01-R2 module, see **Figure 1**.

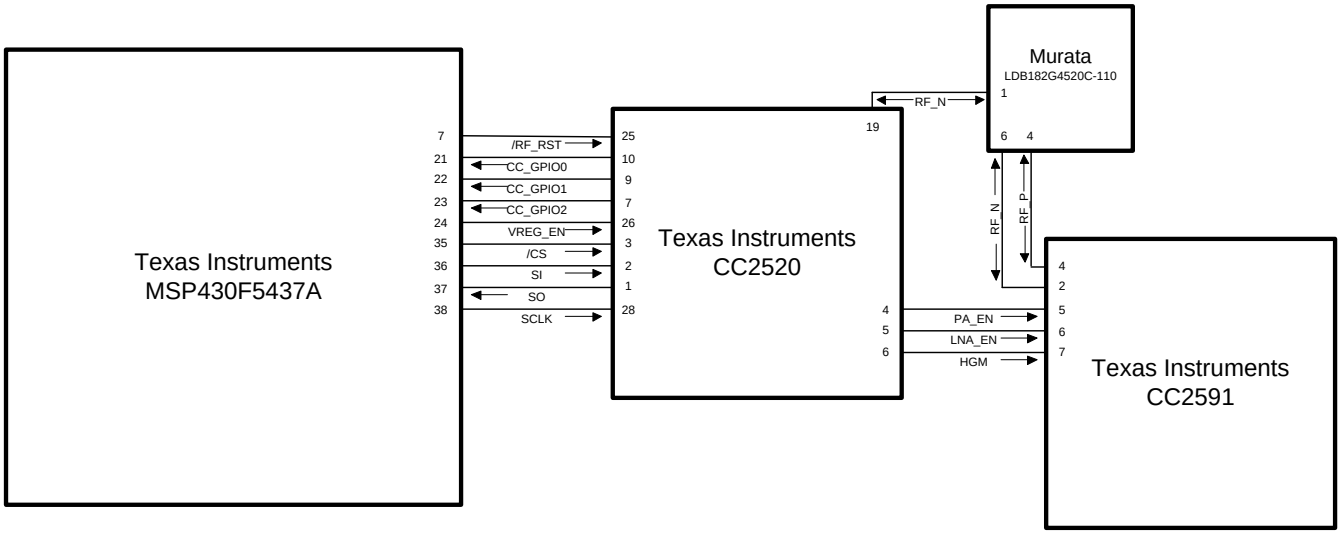

Figure 4 ProFLEX01-R2 Module Block Diagram – Internal Interconnects

Microcontroller

A member of the Texas Instruments MSP430 family of ultra-low-power microcontrollers, the architecture, combined with five low-power modes, is optimized to achieve extended battery life. The device features a powerful 16-bit RISC CPU, 16-bit registers, and constant generators that contribute to maximum code efficiency. The digitally controlled oscillator (DCO) allows wake-up from low-power modes to active mode in less than 5 µs. It can be configured to use up to three 16-bit timers, a high performance 12-bit analog-to-digital (A/D) converter, up to four universal serial communication interfaces (USCI), hardware multiplier, DMA, real time clock module with alarm capabilities, and up to 87 I/O pins. **Figure 5** shows a block diagram of the MSP430F5437A.

The information in this document is subject to change without notice.

 Copyright © 2012-2018 LSR

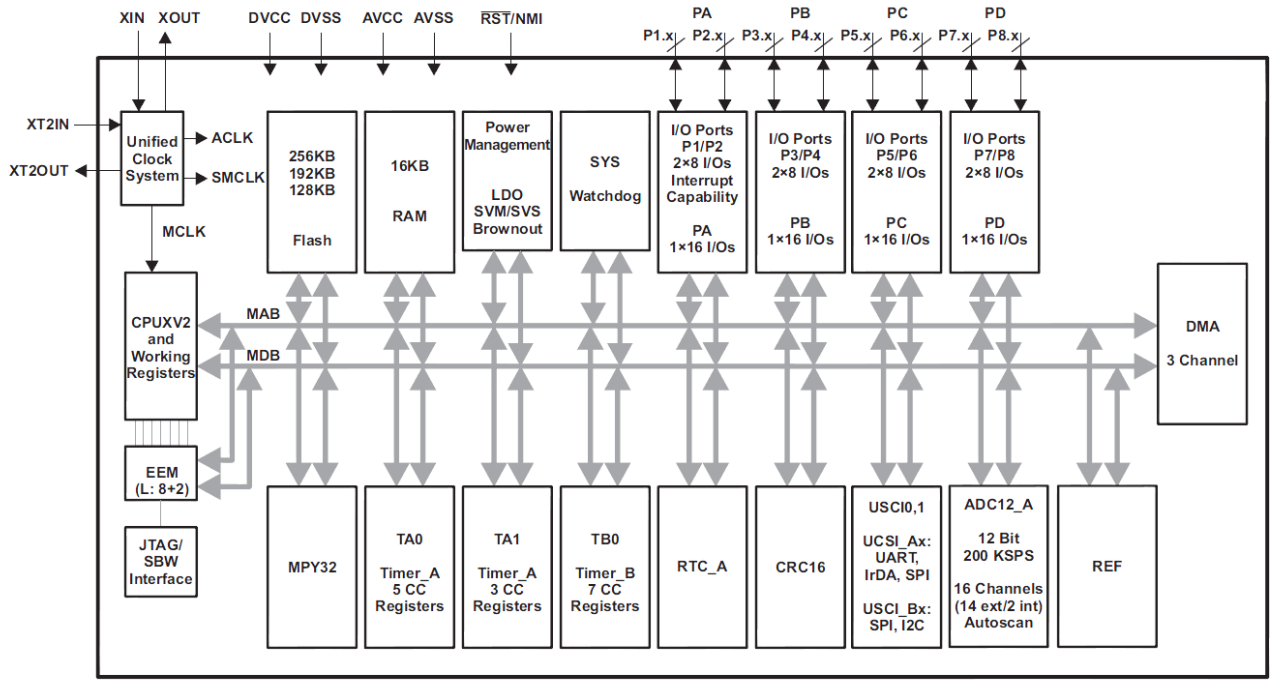

Figure 5 MSP430F5437A Block Diagram

Radio

The CC2520 is TI's second generation ZigBee / IEEE 802.15.4 RF transceiver for the 2.4 GHz unlicensed ISM band. This chip enables industrial grade applications by offering state-of-the-art selectivity/co-existence, excellent link budget, operation up to 125°C and low voltage operation. In addition, the C2520 provides extensive hardware support for frame handling, data buffering, burst transmissions, data encryption, data authentication, clear channel assessment, link quality indication and frame timing information. These features reduce the load on the host controller. **Figure 6** shows a block diagram of the CC2520.

 Copyright © 2012-2018 LSR

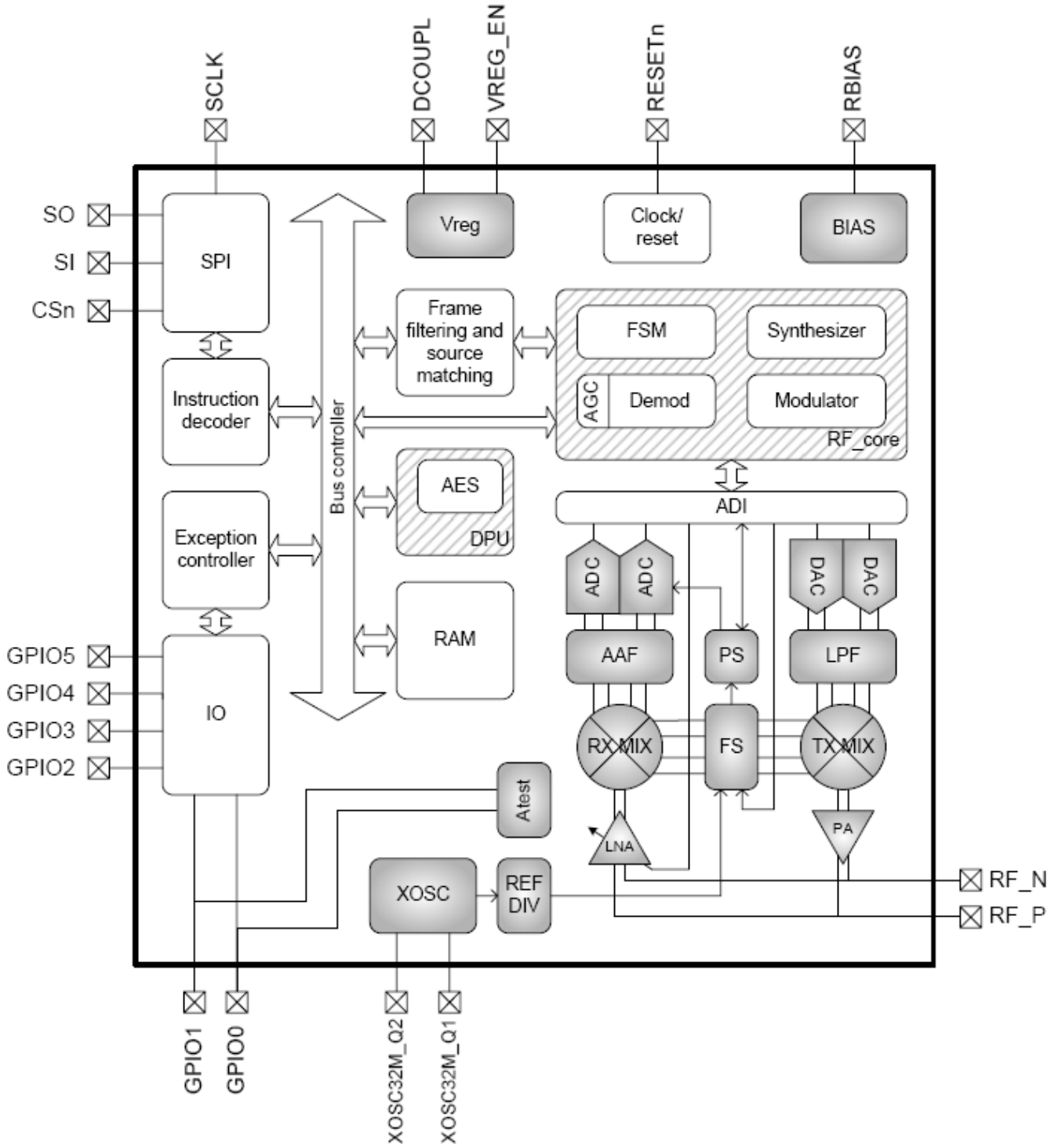

Figure 6 CC2520 Block Diagram

 Copyright © 2012-2018 LSR

PA/LNA

The CC2591 is a cost-effective and high performance RF Front End for low-power and low-voltage 2.4-GHz wireless applications. It is a range extender for all existing and future 2.4-GHz low-power RF transceivers, transmitters and System-on-Chip products from Texas Instruments. It increases the link budget by providing a power amplifier for increased output power, and a LNA with low noise figure for improved receiver sensitivity. It provides a small size, high output power RF design with its 4x4-mm QFN-16 package. It contains PA, LNA, switches, RF-matching, and balun for simple design of high performance wireless applications. Figure 7 shows a block diagram of the CC2591.

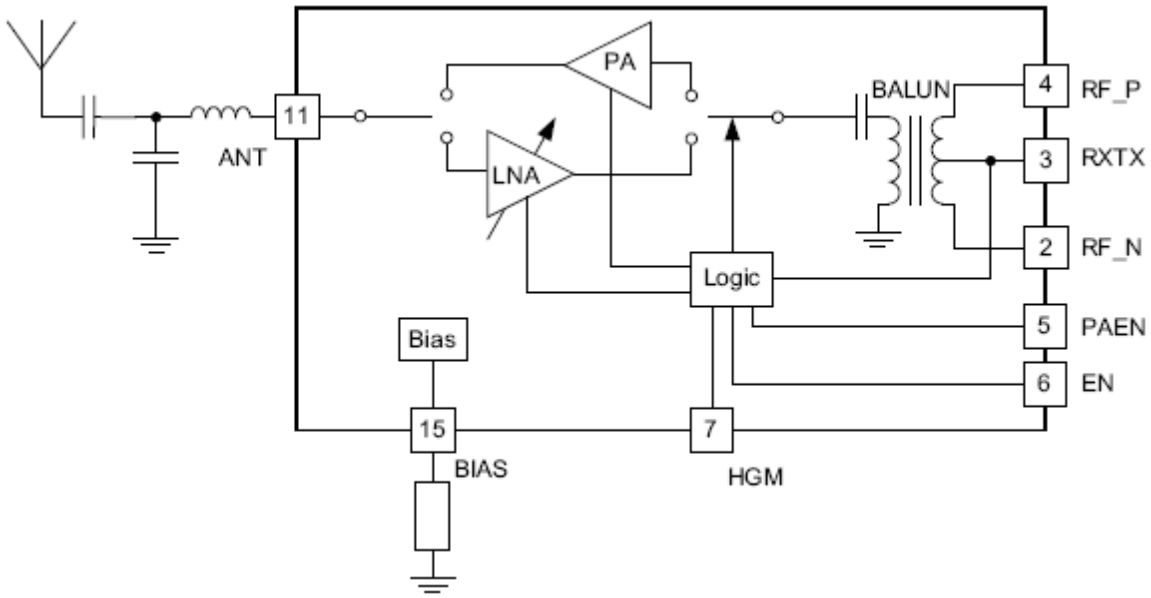

Figure 7 CC2591 Block Diagram

Copyright © 2012-2018 LSR

Antenna Options

The ProFLEX01-R2 module includes an integrated PCB F-antenna. An optional configuration with a U.FL connector is also available. The module regulatory certification has been completed with the following antennas:

- PCB trace antenna
- LSR 001-0001 2.4 GHz Dipole Antenna with Reverse Polarity SMA Connector and LSR 080-0001 U.FL to Reverse Polarity SMA Bulkhead Cable 105mm
- Nearson S131CL-6-PX-2450S dipole antenna on a 6 inch cable with connectors.

An adequate ground plane is necessary to provide good efficiency. The ground plane of the host board on which the module is mounted increases the effective antenna ground plane size and improves the antenna performance.

The environment the module is placed in will dictate the range performance. The non-ideal characteristics of the environment will result in the transmitted signal being reflected, diffracted, and scattered. All of these factors randomly combine to create extremely complex scenarios that will affect the link range in various ways.

It is also best to keep some clearance between the antenna and nearby objects. This includes how the module is mounted in the product enclosure. Unless the items on the following list of recommendations are met, the radiation pattern can be heavily distorted.

Whichever antennas are used, it is best to keep a few things in mind when determining their location.

- Never place ground plane or copper trace routing underneath the antenna.
- LSR recommends keeping metal objects as far away from the antenna as possible. At a very minimum keep the antennas at least 16mm from any metallic objects, components, or wiring. The farther the antenna is placed from these interferers, the less the radiation pattern and gain will be perturbed
- Do not embed the antenna in a metallic or metalized plastic enclosure.
- Try to keep any plastic enclosure greater than 1 cm from the antenna in any orientation.

The information in this document is subject to change without notice.

 Copyright © 2012-2018 LSR

MODES OF OPERATION

- With a host microcontroller
- With the TI 802.15.4 MAC, ZigBee stack, RF4CE stack, and SimpliciTI

Host Microcontroller

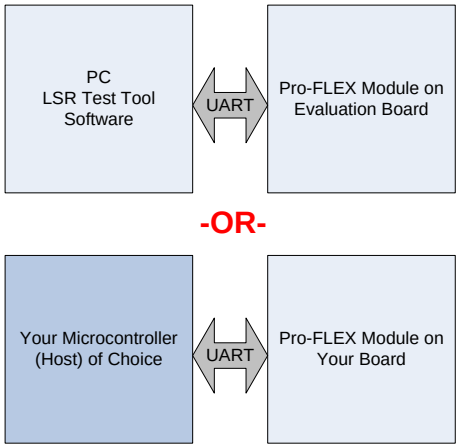

Figure 8 Host Microcontroller Modes of Operation

Out of the box the ProFLEX01-R2 module contains an 802.15.4 based application that uses a host serial processor. This allows features of the module to be explored with the LSR PC based test tool, or controlled with a host microcontroller. The advantage of this method is simplicity; all major features of using the radio are simplified into a simple serial message, taking the burden of becoming a radio expert off the developer.

Use the Communications Log in the ModFLEX™ Test Tool Suite software and serial host protocol documents to see the messages in action. It will help you become familiar with the serial commands and how to implement them on your own microcontroller.

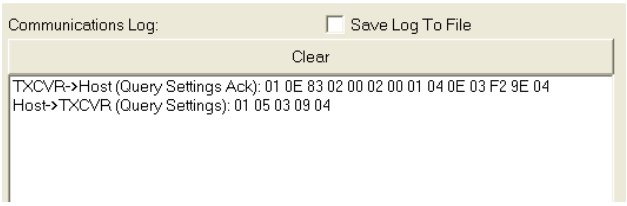

Figure 9 ModFLEX™ Test Tool Communications Log

Some examples of serial commands that can be used with the ProFLEX01-R2 Module:

- Set/Query RF channel
- Set/Query RF power
- Set/Query device address
- Transmit RF data or notification RF data received
- Go to Sleep

Copyright © 2012-2018 LSR

Software Stacks

There are several software stacks provided by TI to streamline development, two of which are described below:

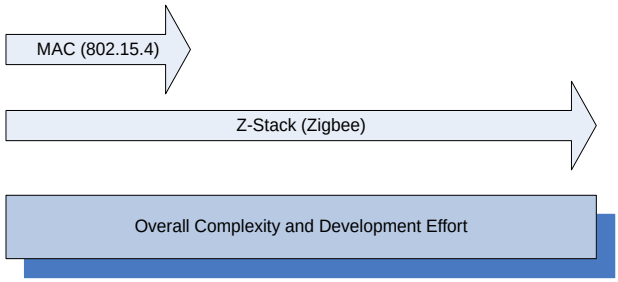

Figure 10 ProFLEX01-R2 Compatible Stacks

802.15.4 MAC

- Use for applications requiring point-to-point or star network topology.
- Advantages: Quick learning curve, minimize software development, easy to deploy in the field
- Disadvantages: No mesh networking

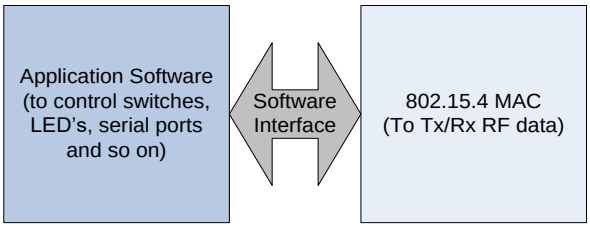

Figure 11 ProFLEX01-R2 with 802.15.4 MAC

TI Z-Stack (ZigBee)

- Use when mesh networking is required.
- Advantages: Covers a large area with a ZigBee network.
- Disadvantages: Large learning curve, more software development, and complexity

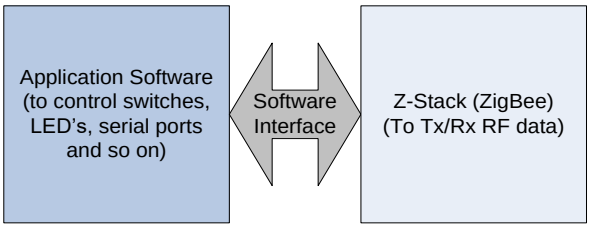

Figure 12 ProFLEX01-R2 with TI Z-Stack (ZigBee)

Copyright © 2012-2018 LSR

DEVELOPMENT TOOLS

TI MSP-FET430UIF

Custom firmware development can be done on the ProFLEX01-R2 module using development tools available thought TI. Shown in **Figure 13**, a MSP-FETUIF USB interface is required. It plugs directly into the ProFLEX01-R2 Development Board (see **Figure 2**), and can easily be adapted to other hardware. See the Texas Instruments website for more information.



Figure 13 MSP-FET430UIF

IAR Embedded Workbench for MSP430

Also required is Embedded Workbench for TI MSP430 from IAR Systems. IAR Embedded Workbench for MSP430 is an integrated development environment for building and debugging embedded applications. Visit the IAR Systems website for additional information.

Copyright © 2012-2018 LSR

ELECTRICAL SPECIFICATIONS

The majority of these characteristics are based on the use of the TI 802.15.4 MAC loaded with the generic application firmware written by LSR. Custom firmware may require these values to be re-characterized by the customer.

Absolute Maximum Ratings

Parameter	Min	Max	Unit
Power supply voltage (VCC)	-0.2	+3.6	V
Voltage on any GPIO	-0.2	VCC + 0.2	V
RF input power, antenna port		+10	dBm
RF input power, transmit port		+8	dBm
Operating temperature	-40	+85	ºC
Storage temperature	-40	+105	ºC

Table 3 Absolute Maximum Ratings[1]

Recommended Operating Conditions

Parameter	Min	Typ	Max	Unit
Power supply voltage (VCC)	2.0		3.3	Vdc
Input frequency	2405		2480	MHz
Ambient temperature range	-40	25	85	ºC

Table 4 Recommended Operating Conditions

Module will NOT transmit, if VCC > 3.4V.

[1] Under no circumstances should exceeding the ratings specified in the Absolute Maximum Ratings section be allowed. Stressing the module beyond these limits may result permanent damage to the module that is not covered by the warranty.

The information in this document is subject to change without notice.

 Copyright © 2012-2018 LSR

General Characteristics

Parameter	Min	Typ	Max	Unit
RF frequency range	2405		2480	MHz
RF data rate		250		kbps
Host data rate	1.2	19.2	921.6	kbps
Flash memory		256		kB
RAM		16		kB
Flash information memory		512		Bytes

Table 5 General Characteristics

Power Consumption

Parameter	Test Conditions	Min	Typ	Max	Unit
Transmit mode	2440 MHz, 3.3V, +25°C, +20 dBm	125	149	175	mA
Receive mode	2440 MHz, 3.3V, +25°C, -50 dBm input	25	30	35	mA
Sleep mode			3		uA

Table 6 Power Consumption

DC Characteristics – General Purpose I/O

Parameter	Test Conditions	Min	Typ	Max	Unit
Logic input low		-0.2		20% VCC	V
Logic input high		80% VCC		VCC + 0.2	V
Logic output low (Full Drive)	Iout = 5 mA	VSS		VSS + 0.25	V
	Iout = 15 mA	VSS		VSS + 0.60	V
Logic output low (Reduced Drive)	Iout = 2 mA	VSS		VSS + 0.25	V
	Iout = 6 mA	VSS		VSS + 0.60	V
Logic output high (Full Drive)	Iout = -5 mA	VCC – 0.25		VCC	V
	Iout = -15 mA	VCC – 0.60		VCC	V
Logic output high (Reduced Drive)	Iout = -2 mA	VCC – 0.25		VCC	V
	Iout = -6 mA	VCC – 0.60		VCC	V

Table 7 DC Characteristics General Purpose I/O

Copyright © 2012-2018 LSR

RF Characteristics

Transmitter Characteristics
(TA =25°C, VCC=3.3 V, fc =2440 MHz)

Parameter	Test Conditions	Min	Typ	Max	Unit
Nominal output power	100mW	18	20	21	dBm
Programmable output power range		7		21	dB
Error vector magnitude			12	35	%

Table 8 Transmitter RF Characteristics

LSR Host RF Power Value	CC2520 TXPOWER Register Value	Typical RF Output Power	Typical Current Consumption
0	0x49	7 dBm	77 mA
1			
2			
3			
4			
5			
6			
7			
8			
9			
10	0x79	12 dBm	92 mA
11			
12			
13	0x6C	16 dBm	105 mA
14			
15	0xE0	18 dBm	122 mA
16			
17	0xF9	20 dBm	149 mA
18			
19			

Table 9 RF Power Settings with LSR Host Software

Copyright © 2012-2018 LSR

Table 10 and **Table 11** below list the nominal RF Power Limits per channel that must be maintained to assure compliance with FCC or ETSI.

RF Channel	Max LSR Host RF Power Value	CC2520 TXPOWER Register Value	RF Output Power
11	16	0xE0	18 dBm
12	16	0xE0	18 dBm
13	16	0xE0	18 dBm
14	19	0xF9	20 dBm
15	19	0xF9	20 dBm
16	19	0xF9	20 dBm
17	19	0xF9	20 dBm
18	19	0xF9	20 dBm
19	19	0xF9	20 dBm
20	19	0xF9	20 dBm
21	19	0xF9	20 dBm
22	19	0xF9	20 dBm
23	19	0xF9	20 dBm
24	19	0xF9	20 dBm
25	16	0xE0	18 dBm
26	Not used	Not used	Not used

Table 10 RF Transmit Output Power Limits for FCC Compliance (Internal or External Antenna)

RF Channel	Max LSR Host RF Power Value	CC2520 TXPOWER Register Value	RF Output Power
11	Not used	Not used	Not used
12	9	0x49	7 dBm
13	9	0x49	7 dBm
14	9	0x49	7 dBm
15	9	0x49	7 dBm
16	9	0x49	7 dBm
17	9	0x49	7 dBm
18	9	0x49	7 dBm
19	9	0x49	7 dBm
20	9	0x49	7 dBm
21	9	0x49	7 dBm
22	9	0x49	7 dBm
23	9	0x49	7 dBm
24	9	0x49	7 dBm
25	9	0x49	7 dBm
26	9	0x49	7 dBm

Table 11 RF Transmit Output Power Limits for ETSI Compliance (Internal or External Antenna)

Copyright © 2012-2018 LSR

Receiver Characteristics
(TA =25°C, VCC=3.3 V, fc =2440 MHz)

Parameter	Test Conditions		Min	Typ	Max	Unit
Receiver sensitivity (1% PER)	HGM		-95	-98	-99	dBm
Saturation (maximum input level) (1% PER)	HGM			-13		dBm
Interference rejection	Desired signal at -82 dBm, 802.15.4 interferer	±5 MHz		51		dB
		±10 MHz		56		dB
		±20 MHz		57		dB

Table 12 Receiver RF Characteristics

For additional details regarding the electrical specifications, see the MSP430F5437A, CC2520, and CC2591 datasheets on the TI website.

Copyright © 2012-2018 LSR

SOLDERING RECOMMENDATIONS

Recommended Reflow Profile for Lead Free Solder

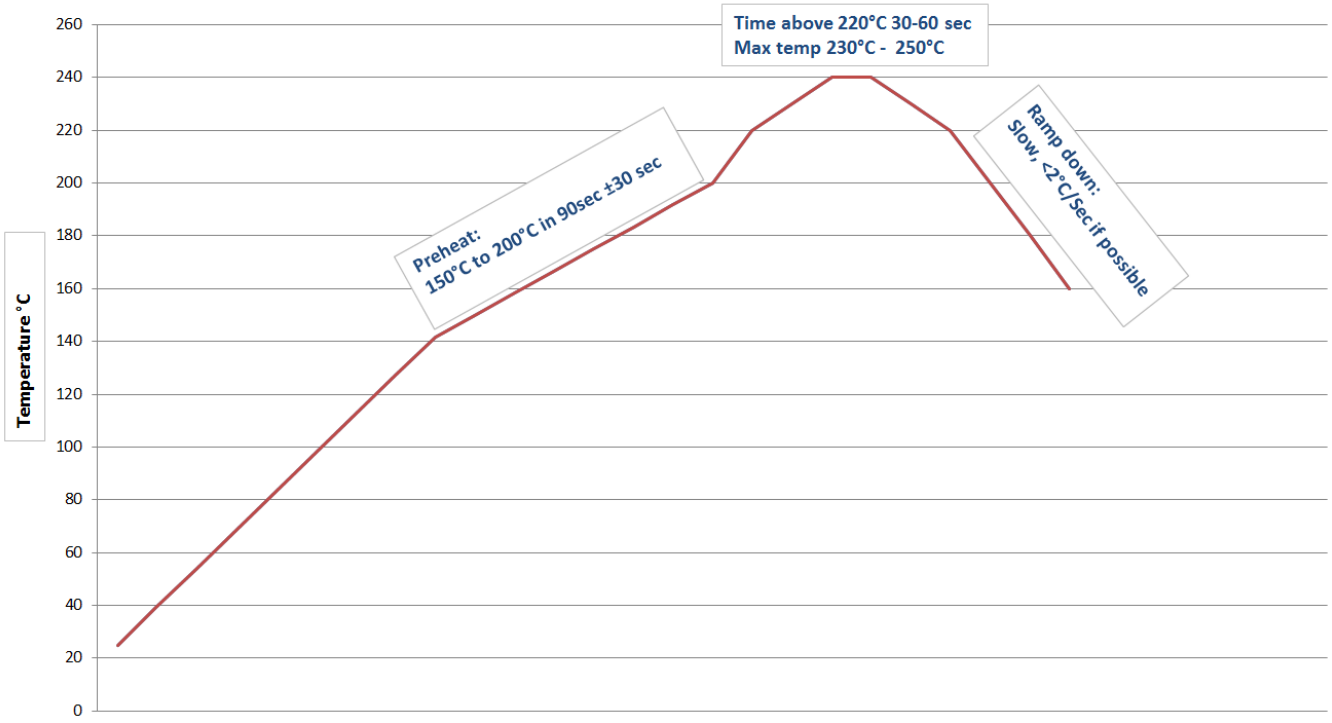

Note: The quality of solder joints on the castellations ('half vias') where they contact the host board should meet the appropriate IPC Specification. See IPC-A-610-D Acceptability of Electronic Assemblies, section 8.2.4 Castellated Terminations."

Copyright © 2012-2018 LSR

CLEANING

In general, cleaning the populated modules is strongly discouraged. Residuals under the module cannot be easily removed with any cleaning process.

- Cleaning with water can lead to capillary effects where water is absorbed into the gap between the host board and the module. The combination of soldering flux residuals and encapsulated water could lead to short circuits between neighboring pads. Water could also damage any stickers or labels.
- Cleaning with alcohol or a similar organic solvent will likely flood soldering flux residuals into the RF shield, which is not accessible for post-washing inspection. The solvent could also damage any stickers or labels.
- Ultrasonic cleaning could damage the module permanently.

OPTICAL INSPECTION

After soldering the Module to the host board, consider optical inspection to check the following:

- Proper alignment and centering of the module over the pads.
- Proper solder joints on all pads.
- Excessive solder or contacts to neighboring pads, or vias.

REWORK

The module can be unsoldered from the host board if the Moisture Sensitivity Level (MSL) requirements are met as described in this datasheet.

Never attempt a rework on the module itself, e.g. replacing individual components. Such actions will terminate warranty coverage.

SHIPPING, HANDLING, AND STORAGE

Shipping

Bulk orders of the ProFLEX01-R2 modules are delivered in trays of 25.

Handling

The ProFLEX01-R2 modules contain a highly sensitive electronic circuitry. Handling without proper ESD protection may destroy or damage the module permanently.

Moisture Sensitivity Level (MSL)

Per J-STD-020, devices rated as MSL 4 and not stored in a sealed bag with desiccant pack should be baked prior to use.

Devices are packaged in a Moisture Barrier Bag with a desiccant pack and Humidity Indicator Card (HIC). Devices that will be subjected to reflow should reference the HIC and J-STD-033 to determine if baking is required.

If baking is required, refer to J-STD-033 for bake procedure.

Storage

Per J-STD-033, the shelf life of devices in a Moisture Barrier Bag is 12 months at <40ºC and <90% room humidity (RH).

Do not store in salty air or in an environment with a high concentration of corrosive gas, such as Cl2, H2S, NH3, SO2, or NOX.

Do not store in direct sunlight.

The product should not be subject to excessive mechanical shock.

Copyright © 2012-2018 LSR

Repeating Reflow Soldering

Only a single reflow soldering process is encouraged for host boards.

Copyright © 2012-2018 LSR

AGENCY STATEMENTS

Agency Certifications

FCC ID: TFB-PROFLEX1

IC ID: 5969A-PROFLEX1

CE: Compliant to standards EN 60950-1, EN 300 328, and EN 301 489

Federal Communication Commission Interference Statement

This equipment has been tested and found to comply with the limits for a Class B digital device, pursuant to Part 15 of the FCC Rules. These limits are designed to provide reasonable protection against harmful interference in a residential installation. This equipment generates uses and can radiate radio frequency energy and, if not installed and used in accordance with the instructions, may cause harmful interference to radio communications. However, there is no guarantee that interference will not occur in a particular installation. If this equipment does cause harmful interference to radio or television reception, which can be determined by turning the equipment off and on, the user is encouraged to try to correct the interference by one of the following measures:

- Reorient or relocate the receiving antenna.
- Increase the separation between the equipment and receiver.
- Connect the equipment into an outlet on a circuit different from that to which the receiver is connected.
- Consult the dealer or an experienced radio/TV technician for help.

This device complies with Part 15 of the FCC Rules. Operation is subject to the following two conditions: (1) This device may not cause harmful interference, and (2) this device must accept any interference received, including interference that may cause undesired operation.

FCC CAUTION: Any changes or modifications not expressly approved by the party responsible for compliance could void the user's authority to operate this equipment.

Copyright © 2012-2018 LSR

Industry Canada Statements

Operation is subject to the following two conditions: (1) this device may not cause interference, and (2) this device must accept any interference, including interference that may cause undesired operation of the device.

To reduce potential radio interference to other users, the antenna type and its gain should be so chosen that the equivalent isotropically radiated power (e.i.r.p.) is not more than that permitted for successful communication.

This device has been designed to operate with the antennas listed below, and having a maximum gain of 2.0 dB. Antennas not included in this list or having a gain greater than 2.0 dB are strictly prohibited for use with this device. The required antenna impedance is 50 ohms.

- *LSR 001-0001 2.4 GHz Dipole Antenna with Reverse Polarity SMA Connector and LSR 080-0001 U.FL to Reverse Polarity SMA Cable.*
- *Nearson S131CL-6-PX-2450S*
- *Embedded PCB trace antenna*

 Copyright © 2012-2018 LSR

OEM Responsibilities to comply with FCC and Industry Canada Regulations

The ProFLEX01-R2 Module has been certified for integration into products only by OEM integrators under the following conditions:

This device is granted for use in Mobile only configurations in which the antennas used for this transmitter must be installed to provide a separation distance of at least 20cm from all person and not be co-located with any other transmitters except in accordance with FCC and Industry Canada multi-transmitter product procedures.

As long as the two conditions above are met, further transmitter testing will not be required. However, the OEM integrator is still responsible for testing their end-product for any additional compliance requirements required with this module installed (for example, digital device emissions, PC peripheral requirements, etc.).

IMPORTANT NOTE: In the event that these conditions cannot be met (for certain configurations or co-location with another transmitter), then the FCC and Industry Canada authorizations are no longer considered valid and the FCC ID and IC Certification Number cannot be used on the final product. In these circumstances, the OEM integrator will be responsible for re-evaluating the end product (including the transmitter) and obtaining a separate FCC and Industry Canada authorization.

Copyright © 2012-2018 LSR

End Product Labelling

The ProFLEX01-R2 Module is labeled with its own FCC ID and IC Certification Number. If the FCC ID and IC Certification Number are not visible when the module is installed inside another device, then the outside of the device into which the module is installed must also display a label referring to the enclosed module. In that case, the final end product must be labeled in a visible area with the following:

"**Contains Transmitter Module FCC ID: TFB-PROFLEX1**"

"**Contains Transmitter Module IC: 5969A-PROFLEX1**"

or

"**Contains FCC ID: TFB-PROFLEX1**"

"**Contains IC: 5969A-PROFLEX1**"

The OEM of the ProFLEX01-R2 Module must only use the approved antenna(s) listed above, which have been certified with this module.

The OEM integrator has to be aware not to provide information to the end user regarding how to install or remove this RF module or change RF related parameters in the user manual of the end product.

The user manual for the end product must include the following information in a prominent location:

> This device is granted for use in Mobile only configurations in which the antennas used for this transmitter must be installed to provide a separation distance of at least 20cm from all person and not be co-located with any other transmitters except in accordance with FCC and Industry Canada multi-transmitter product procedures.

 Copyright © 2012-2018 LSR

EUROPE

CE Notice

This device has been tested and certified for use in the European Union. See the Declaration of Conformity (DoC) for specifics.

If this device is used in a product, the OEM has responsibility to verify compliance of the final product to the EU standards. A Declaration of Conformity must be issued and kept on file as described in the Radio and Telecommunications Terminal Equipment (R&TTE) Directive.

The 'CE' mark must be placed on the OEM product per the labeling requirements of the Directive.

Declaration of Conformity (DoC)

This DoC can be downloaded from the LSR Wiki.

Copyright © 2012-2018 LSR

ANTENNA INFORMATION

Dipole Antenna 001-0001

See antenna datasheet.

F Antenna

Flat 2.405 GHz

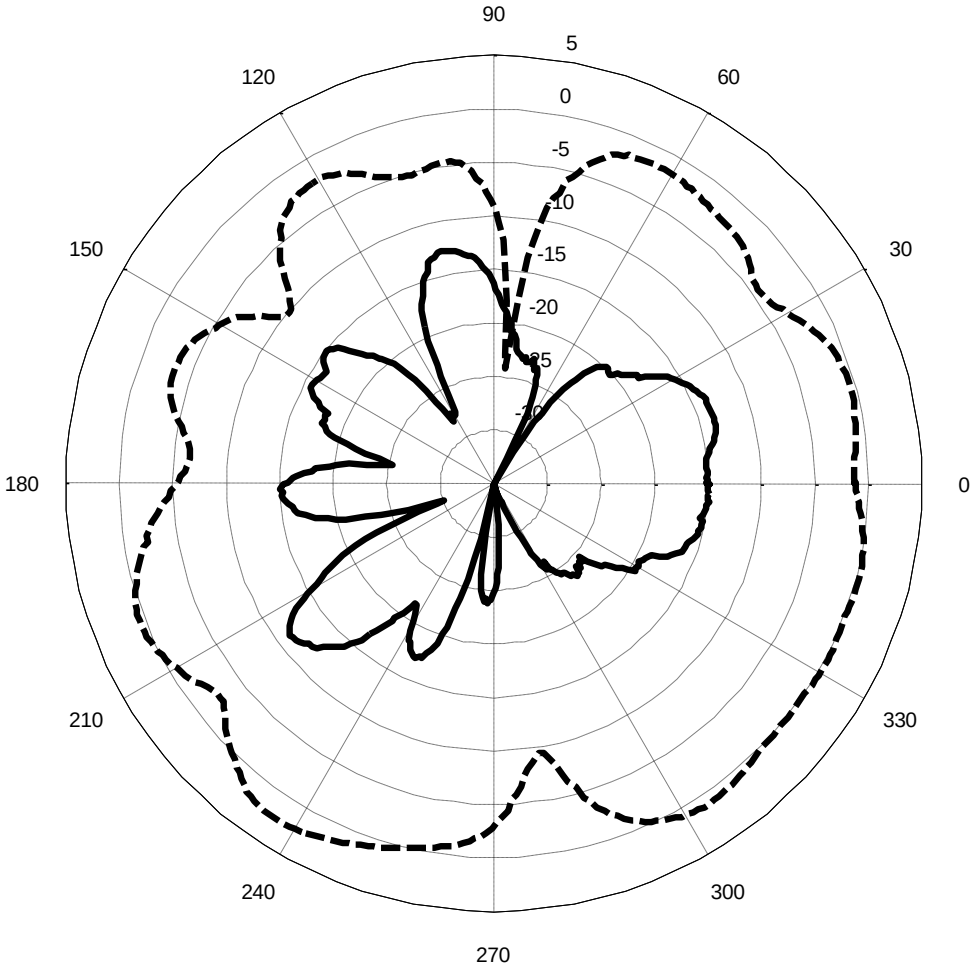

Figure 14 Flat 2.405 GHz

Copyright © 2012-2018 LSR

Flat 2.440 GHz

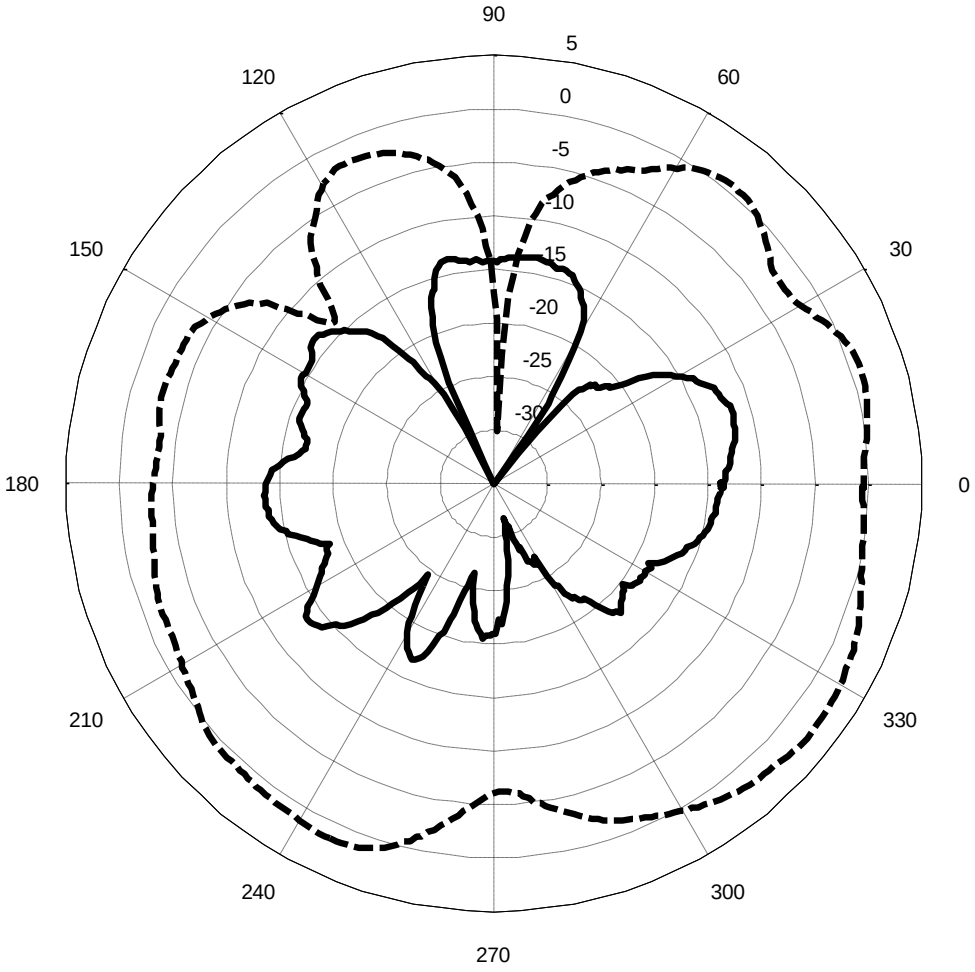

Figure 15 Flat 2.440 GHz

Copyright © 2012-2018 LSR

Flat 2.480 GHz

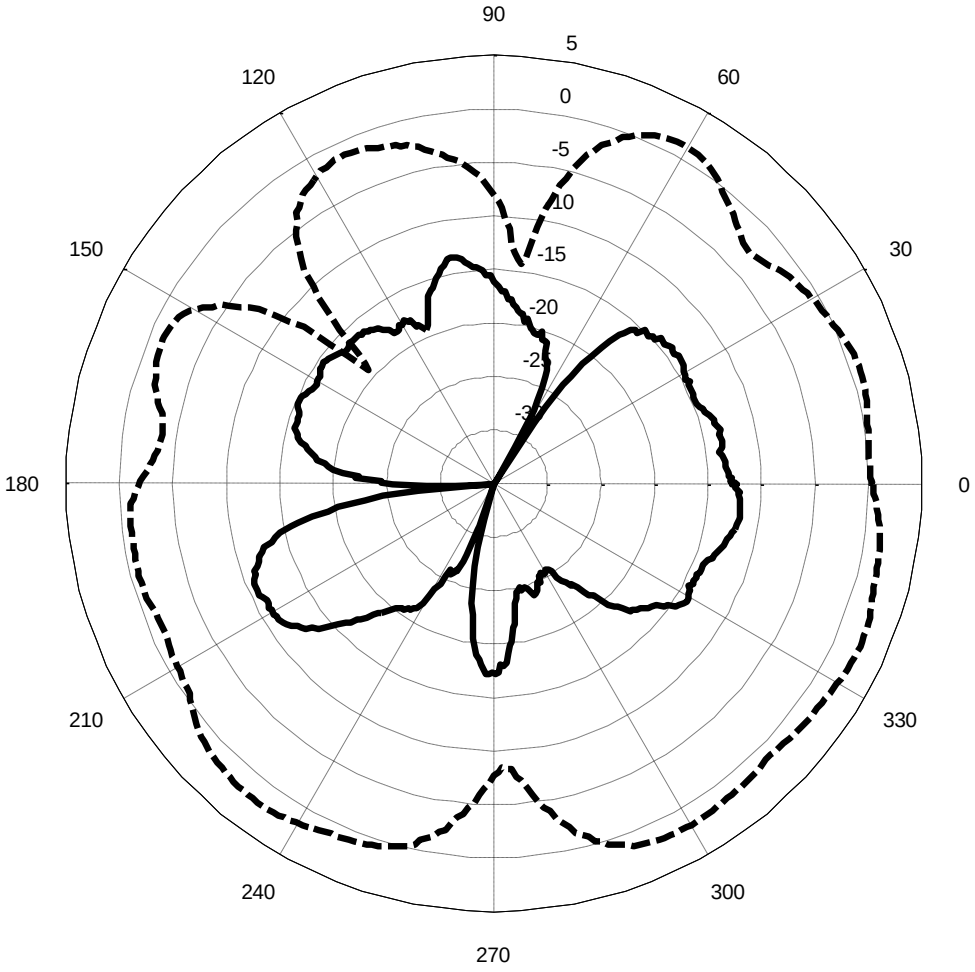

Figure 16 Flat 2.480 GHz

 Copyright © 2012-2018 LSR

Side 2.405 GHz

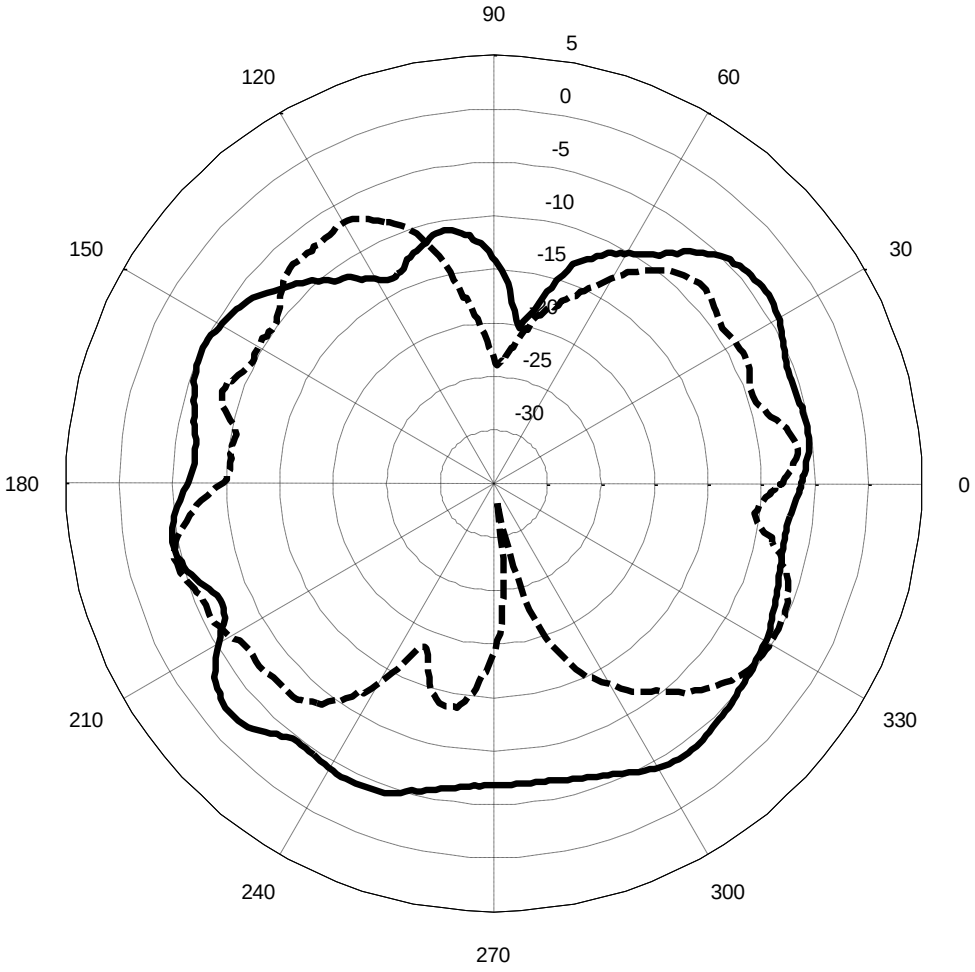

Figure 17 Side 2.405 GHz

 Copyright © 2012-2018 LSR

Side 2.440 GHz

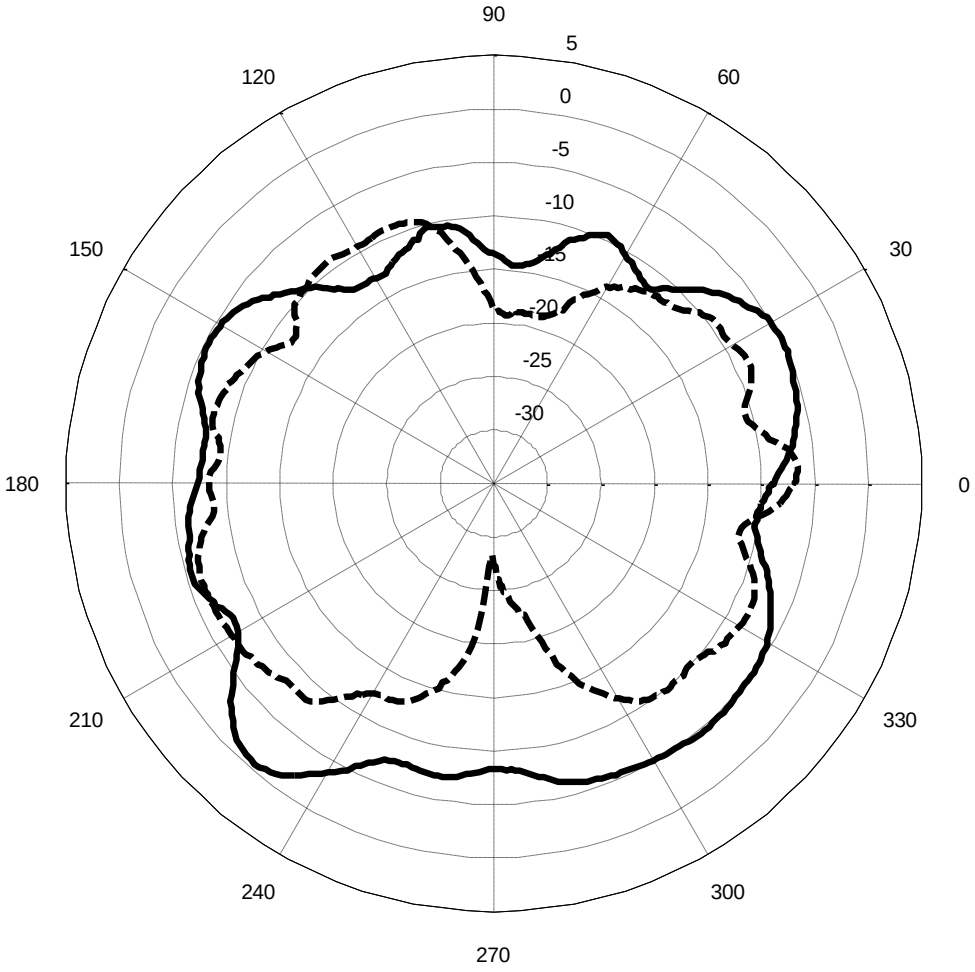

Figure 18 Side 2.440 GHz

Copyright © 2012-2018 LSR

Side 2.480 GHz

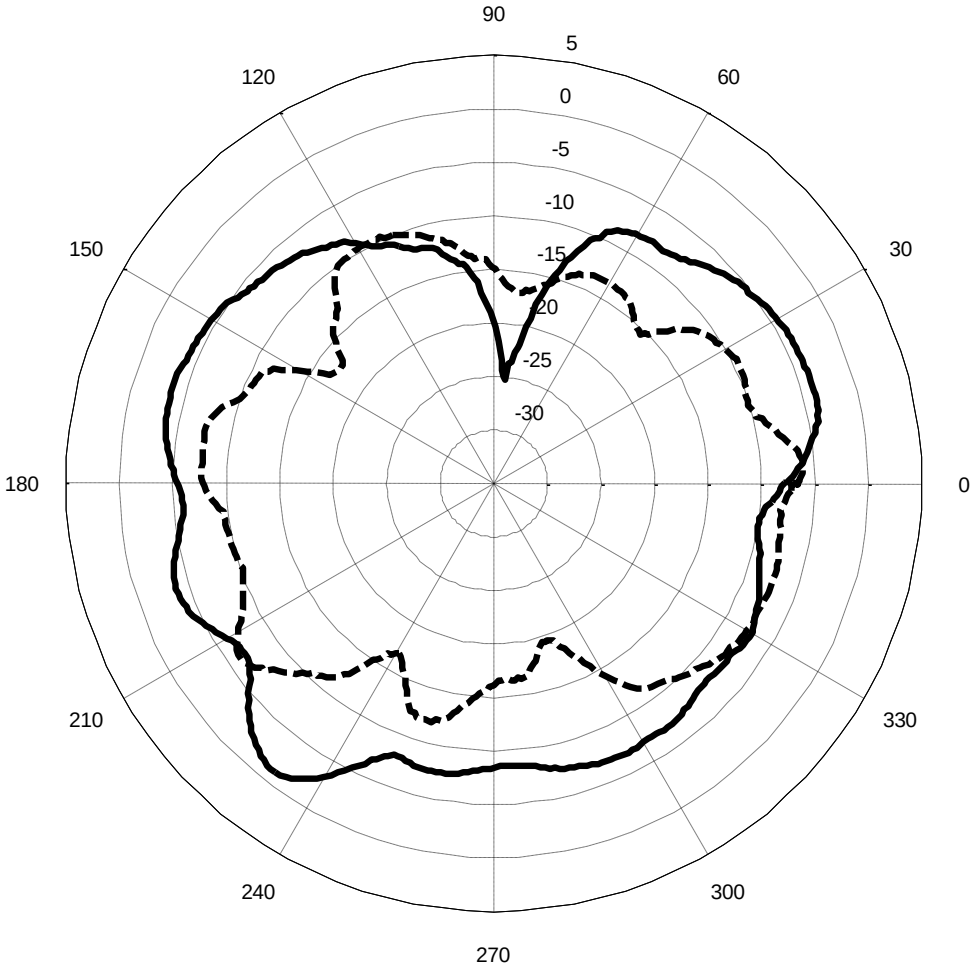

Figure 19 Side 2.480 GHz

 Copyright © 2012-2018 LSR

Vertical 2.405 GHz

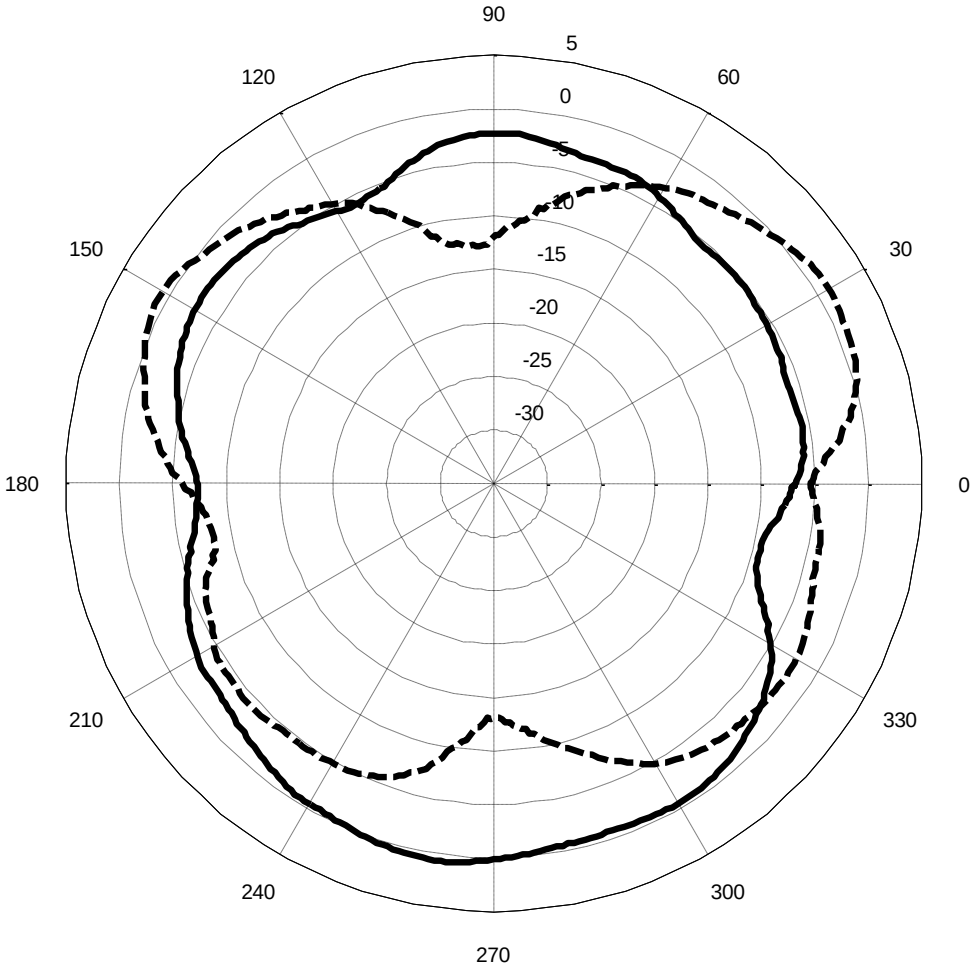

Figure 20 Vertical 2.405 GHz

Copyright © 2012-2018 LSR

Vertical 2.440 GHz

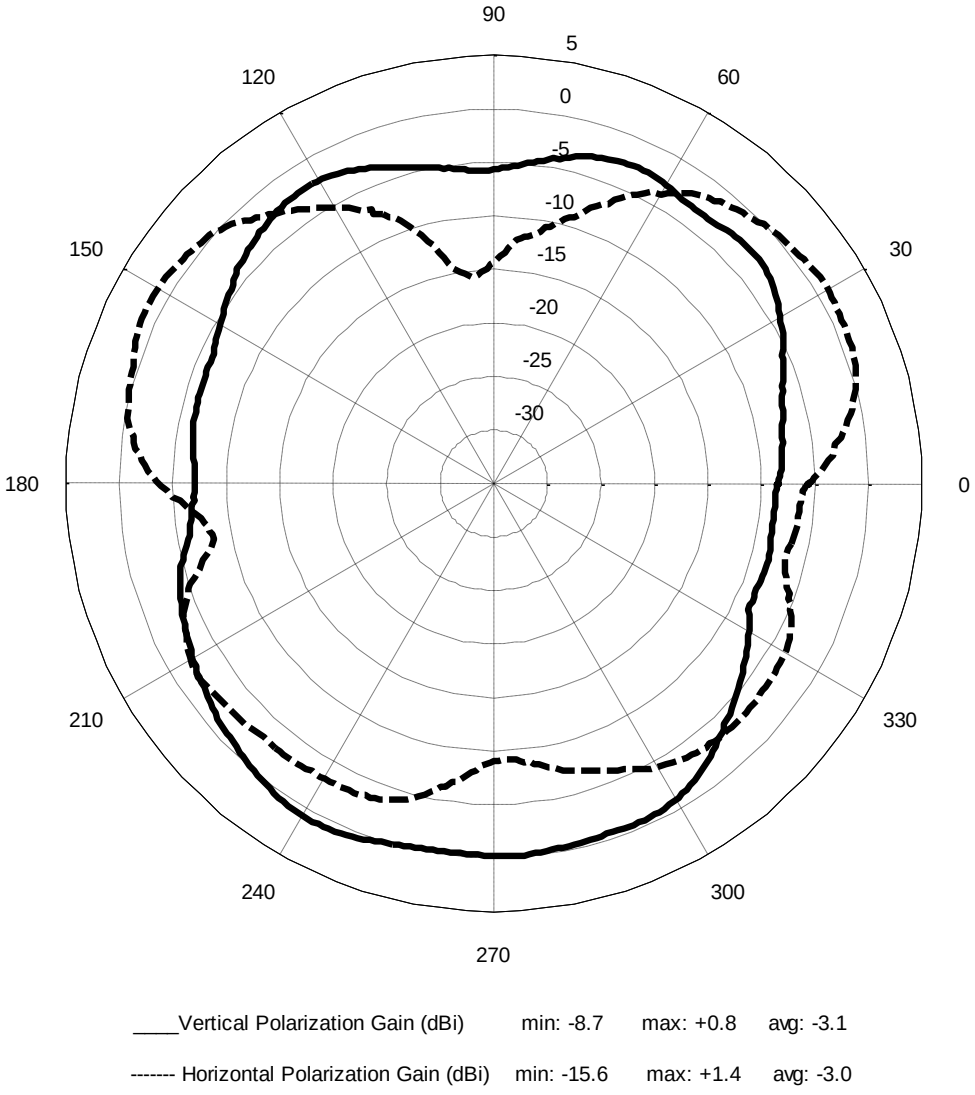

Figure 21 Vertical 2.440 GHz

Copyright © 2012-2018 LSR

Vertical 2.480 GHz

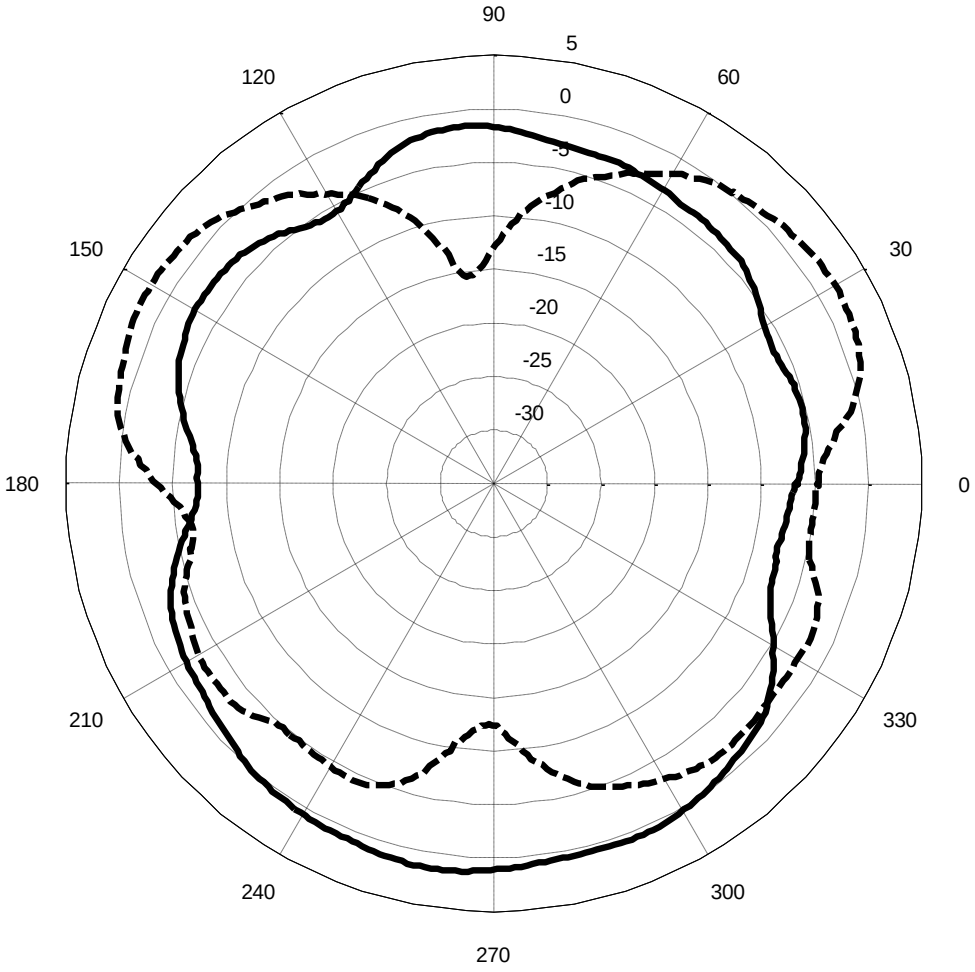

Figure 22 Vertical 2.480 GHz

Copyright © 2012-2018 LSR

MECHANICAL DATA

PCB Footprint

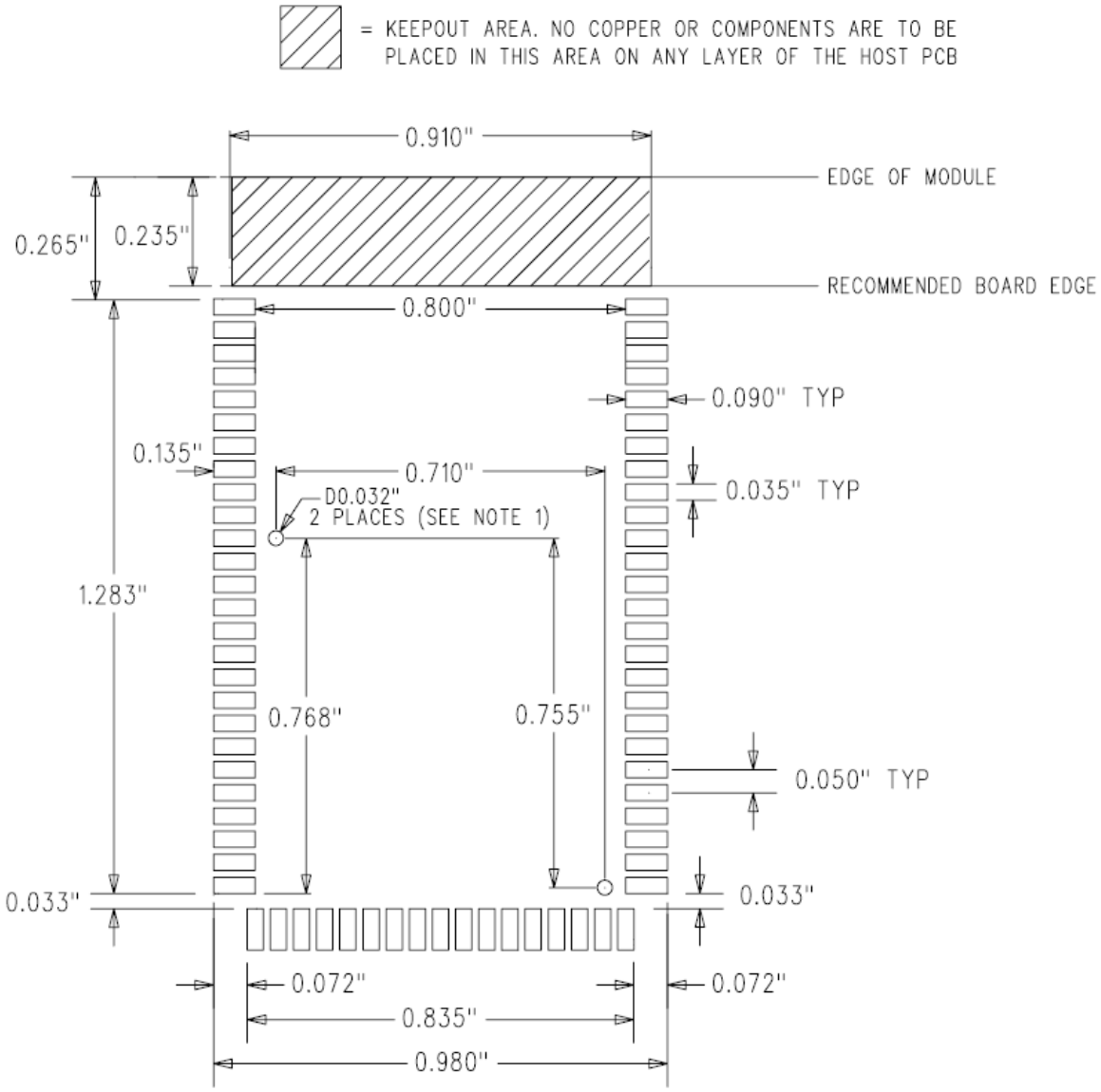

Notes:
1) Optional alignment holes are for use with fixture placement and hand soldering operations.
2) See http://wiki.lsr.com for additional information.

Figure 23 PCB footprint

Copyright © 2012-2018 LSR

General Module Dimensions

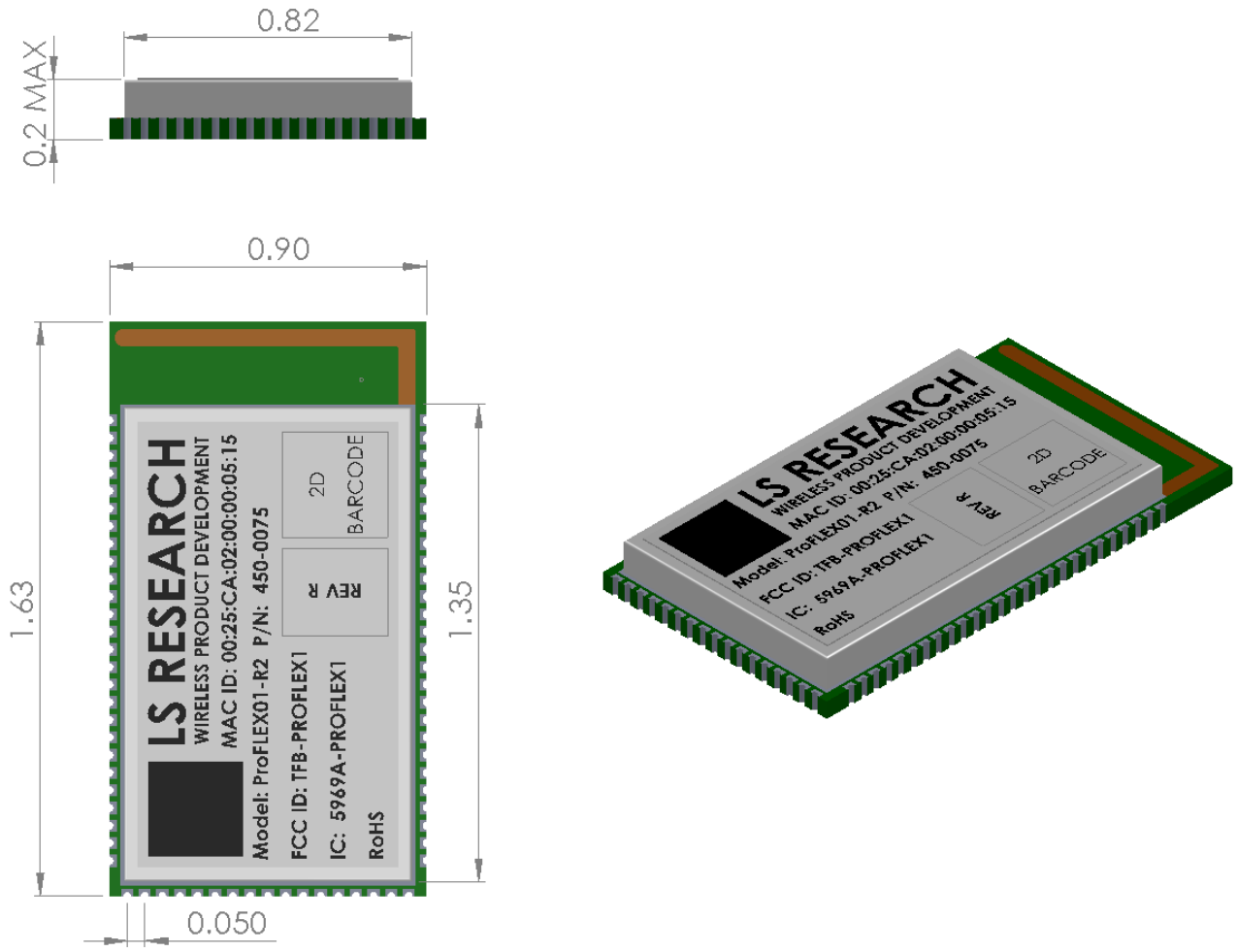

Figure 24 Basic dimensions

Copyright © 2012-2018 LSR

COMPATIBILITY

To maintain compatibility with other ModFLEX™ family transceiver modules it is important to use the module pins in your application as they are designated in **Figure 25**. Since the available GPIO and peripherals vary per micro, not all pins may be populated.

All attempts are made to lay out modules starting with the lowest number in the peripheral (ADC, TMR/PWM, GPIO) series. For example if there are only two ADC's available they will be brought out to ADC1 and ADC2 (module pins 20 and 21).

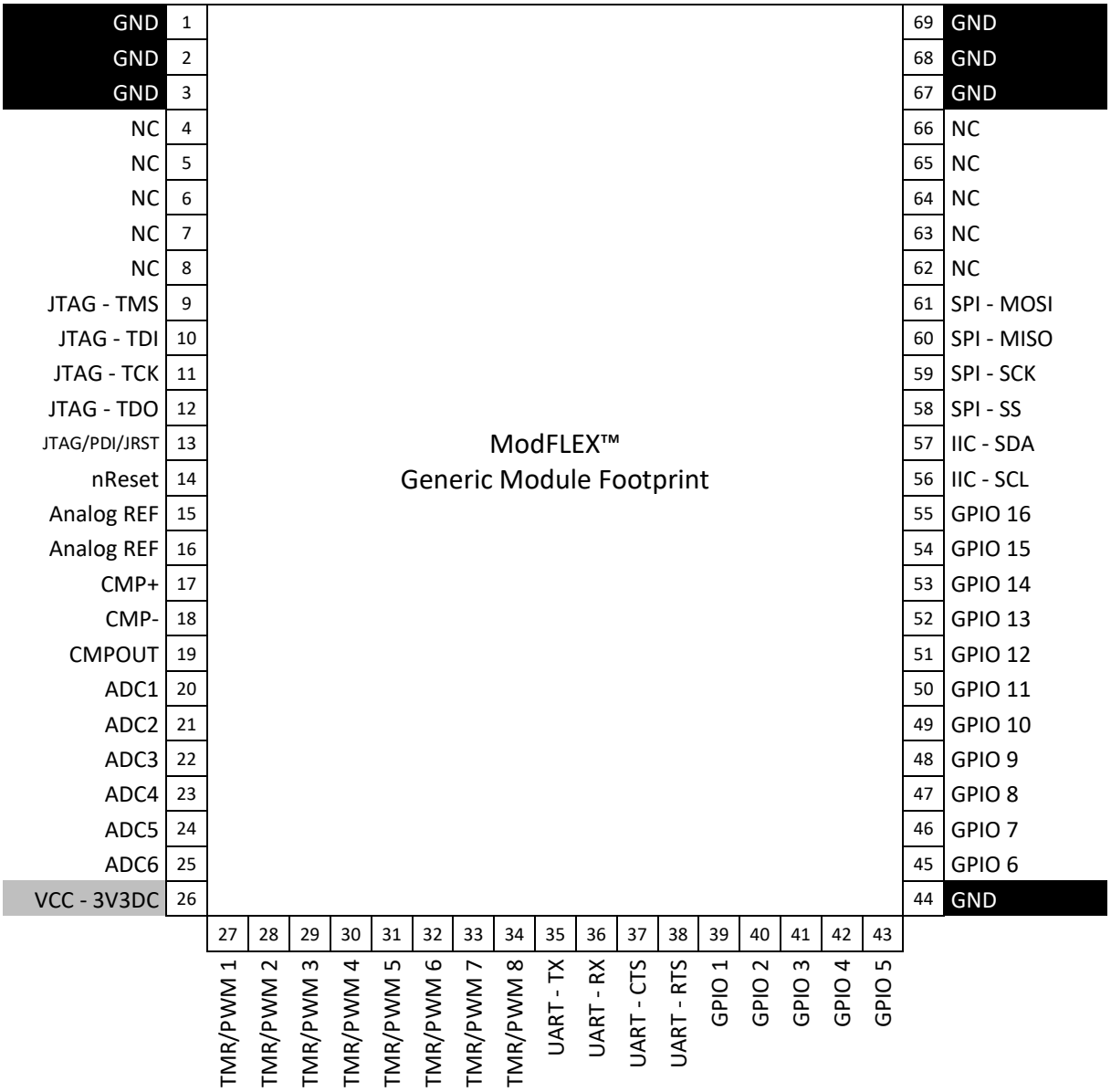

Figure 25 ModFLEX™ Generic Module Footprint

Copyright © 2012-2018 LSR

MODULE REVISION HISTORY

Rev 1

- Initial production release.

Part Number: 450-0075
F Antenna Module



00:25:CA:02:XX:XX:XX = MAC ID
2D Barcode Format is Data Matrix Standard
XX:XX:XX:XX = unique portion of MAC ID that changes for each module

Part Number: 450-0076
U.FL Module

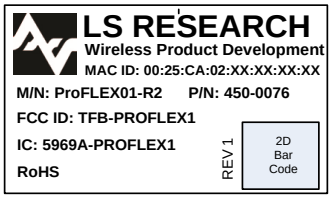

00:25:CA:02:XX:XX:XX = MAC ID
2D Barcode Format is Data Matrix Standard
XX:XX:XX:XX = unique portion of MAC ID that changes for each module

Rev 2

- Module Firmware Updated.

Part Number: 450-0075
F Antenna Module



Part Number: 450-0076
U.FL Module

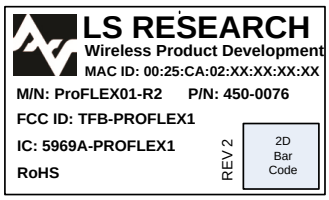

 Copyright © 2012-2018 LSR

Rev 3

- Module Firmware Updated.

Part Number: 450-0075
F Antenna Module

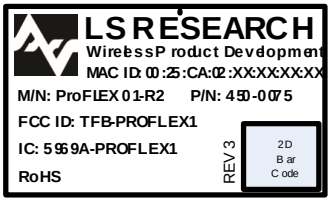

Part Number: 450-0076
U.FL Module



Rev 4

- Module Firmware Updated.

Part Number: 450-0075
F-Antenna Module





 Copyright © 2012-2018 LSR

CONTACTING LSR

Headquarters

LSR
W66 N220 Commerce Court
Cedarburg, WI 53012-2636
USA
Tel: 1(262) 375-4400
Fax: 1(262) 375-4248

Website www.lsr.com

Sales Contact sales@lsr.com

© Copyright 2018 Laird. All Rights Reserved. Patent pending. Any information furnished by Laird and its agents is believed to be accurate and reliable. All specifications are subject to change without notice. Responsibility for the use and application of Laird materials or products rests with the end user since Laird and its agents cannot be aware of all potential uses. Laird makes no warranties as to non-infringement nor as to the fitness, merchantability, or sustainability of any Laird materials or products for any specific or general uses. Laird, Laird Technologies, Inc., or any of its affiliates or agents shall not be liable for incidental or consequential damages of any kind. All Laird products are sold pursuant to the Laird Terms and Conditions of Sale in effect from time to time, a copy of which will be furnished upon request. When used as a tradename herein, Laird means Laird Limited due to the acquisition by Advent or one or more subsidiaries of Laird Limited. LairdTM, Laird TechnologiesTM, corresponding logos, and other marks are trademarks or registered trademarks of Laird. Other marks may be the property of third parties. Nothing herein provides a license under any Laird or any third party intellectual property right.