This document was generated on 05/27/2010

PLEASE CHECK WWW.MOLEX.COM FOR LATEST PART INFORMATION

Part Number: 0009503151
Status: Active
Overview: kk
Description: 3.96mm (.156") Pitch KK® Crimp Terminal Housing, Friction Ramp, 15 Circuits

Documents:
3D Model
Drawing (PDF)
Product Specification PS-08-50 (PDF)
RoHS Certificate of Compliance (PDF)

Agency Certification

CSA	LR19980

General

Product Family	Crimp Housings
Series	2139
Overview	kk
Product Name	KK®

Physical

Circuits (maximum)	15
Color - Resin	Natural
Flammability	94V-2
Gender	Female
Glow-Wire Compliant	No
Lock to Mating Part	Yes
Material - Resin	Nylon
Number of Rows	1
Packaging Type	Bag
Panel Mount	No
Pitch - Mating Interface (in)	0.156 In
Pitch - Mating Interface (mm)	3.96 mm
Temperature Range - Operating	0°C to +75°C

Material Info

Old Part Number	2139-15A

Reference - Drawing Numbers

Packaging Specification	PK-2139-001
Product Specification	PS-08-50
Sales Drawing	SD-2139

EU RoHS
ELV and RoHS Compliant
REACH SVHC
Not Reviewed
Halogen-Free Status
Not Reviewed

China RoHS

Need more information on product environmental compliance?

Email productcompliance@molex.com
For a multiple part number RoHS Certificate of Compliance, click here

Please visit the Contact Us section for any non-product compliance questions.

Search Parts in this Series
2139Series

Use With
2478 Crimp Terminals for 18-24 AWG, 2578 Crimp Terminals for 22-26 AWG

This document was generated on 05/27/2010

PLEASE CHECK WWW.MOLEX.COM FOR LATEST PART INFORMATION

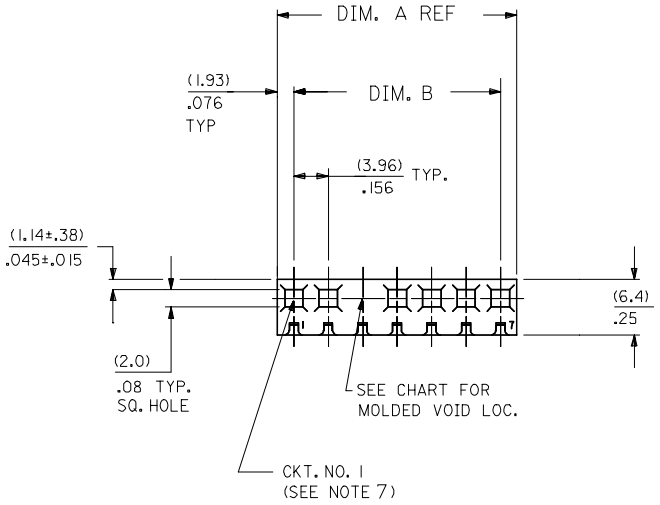

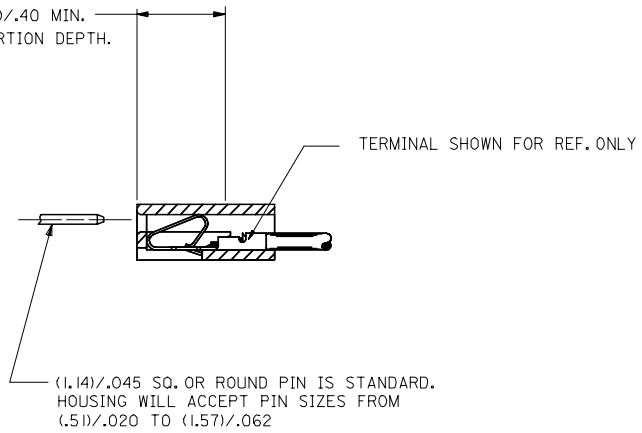

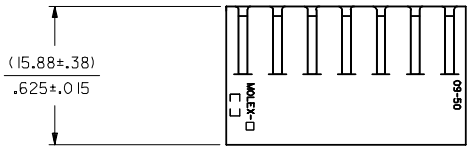

DIM. A	DIM. B	NO. OF
(7.82)	(3.96±.13)	2
.308	.156±.005	
(11.79)	(7.92±.13)	3
.464	.312±.005	
(15.75)	(11.89±.13)	4
.620	.468±.005	
(19.71)	(15.85±.13)	5
.776	.624±.005	
(23.67)	(19.81±.13)	6
.932	.780±.005	
(27.64)	(23.77±.13)	7
1.088	.936±.005	
(31.60)	(27.74±.25)	8
1.244	1.092±.010	
(35.56)	(31.70±.25)	9
1.400	1.248±.010	
(39.52)	(35.66±.25)	10
1.556	1.404±.010	
(43.48)	(39.62±.25)	11
1.712	1.560±.010	
(47.45)	(43.59±.25)	12
1.868	1.716±.010	
(51.41)	(47.55±.31)	13
2.024	1.872±.012	
(55.37)	(51.51±.36)	14
2.180	2.028±.014	
(59.33)	(55.47±.36)	15
2.336	2.184±.014	
(63.30)	(59.44±.36)	16
2.492	2.340±.014	
(67.26)	(63.40±.36)	17
2.648	2.496±.014	
(71.22)	(67.36±.36)	18
2.804	2.652±.014	
(75.18)	(71.32±.36)	19
2.960	2.808±.014	
(79.15)	(75.29±.36)	20
3.116	2.964±.014	
(83.11)	(79.25±.46)	21
3.272	3.120±.018	
(87.07)	(83.21±.46)	22
3.428	3.276±.018	
(91.03)	(87.17±.46)	23
3.584	3.432±.018	
(95.00)	(91.14±.46)	24
3.740	3.588±.018	

2139-N**-**-**

- NO. OF CKT'S.
- SELECTIVE RAMP LOC.
  BLANK=NONE
  AA=1ST. SEL. LOC.
  AB=2ND. SEL. LOC., ETC.
- VOID CODE
  NO. CORRESPONDS TO
  CKT. NO. VOIDED.
  MULT. VOIDS START WITH 51.
- COLOR CODE
  BLANK=NATURAL
  GN=GREEN
  YW=YELLOW
  RD=RED
  OR=ORNAGE
  BU=BLUE
  BK=BLACK

OPTION CODE

OPT. CODE	RAMP	POL. RIB	EARS	MATERIAL	ENGRAVING	PACKAGING
A	STD. RAMP	NO	NO	NYLON 94V-2	STD.	PK-2139-001
C	NONE	NO	NO	NYLON 94V-2	STD.	PK-2139-002
G	WIDE RAMP	NO	NO	NYLON 94V-2	STD.	PK-2139-001
M	STD. RAMP	NO	NO	NYLON 6 94V-2	STD.	TBD-INDIA
N	NONE	NO	NO	NYLON 6 94V-2	STD.	TBD-INDIA
P	STD. RAMP	YES	NO	NYLON 94V-2	STD.	TBD SINGAPORE

SEE NOTE 6

NOTES:
1. MATERIAL: SEE LEGEND.
2. FINISH: N/A
3. PARTS CONFORM TO PRODUCT SPECIFICATION PS-08-50.
4. PACKAGING INFORMATION: SEE LEGEND
5. THIS HOUSING FOR USE WITH TERMINAL NO. 2478 (18 TO 24 GA) & 2578 (22 TO 26 GA), WITH (2.54)/.100 MAX. INSULATION DIA.. HOUSING 41695 IS RECOMMENDED FOR OVER (2.54)/.100 DIA. INSULATION.
6. DIMENSIONS GIVEN ACROSS CENTERLINES ARE SYMMETRICAL ABOUT THOSE CENTERLINES WITHIN HALF THE TOTAL TOLERANCE.
7. FIRST CKT. NO. ON 1 THRU 5 CKT. HOUSINGS. FIRST AND LAST CKT. NO. ON 6 CKT HOUSING AND LARGER.
8. MAX BOW .005 MM/MM OR .005 IN/IN
9. 2139-NP-* IS MANUFACTURED IN SINGAPORE ONLY.

REV	DESCRIPTION	
AE1	UPDATE PER ECN	2005/12/09
	ECC NO: UCP2006-0451	2005/12/12
	DRWN: JLOWE	2005/12/12
	CHKD: ADERR	
	APPR: FSMITH	2005/12/14

QUALITY SYMBOLS
▼=0
▽=0

GENERAL TOLERANCES (UNLESS SPECIFIED)

	mm	INCH
4 PLACES	± ---	±---
3 PLACES	± ---	±.010
2 PLACES	± 0.25	±.014
1 PLACE	± 0.36	±---
ANGULAR ±1/2°		

DRAFT WHERE APPLICABLE MUST REMAIN WITHIN DIMENSIONS

DIMENSION STYLE	MM/IN
SCALE	---
DESIGN UNITS	INCH
	THIRD ANGLE PROJECTION
DRAWN BY	SAMIEC
DATE	1986/01/17
CHECKED BY	PATEL
DATE	1986/01/17
APPROVED BY	LENZ
DATE	1986/01/07
MATERIAL NO.	SEE CHART
DOCUMENT NO.	SD-2139
SHEET NO.	1 OF 4
SIZE	D

TITLE: CONNECTOR HOUSING .156 CL CRIMP TERMINAL 2139 SERIES DWG.

MOLEX INCORPORATED

MFG. SHL	REV.
4	AE1
3	AE1
2	AE1
1	AE1

THIS DRAWING CONTAINS INFORMATION THAT IS PROPRIETARY TO MOLEX INCORPORATED AND SHOULD NOT BE USED WITHOUT WRITTEN PERMISSION

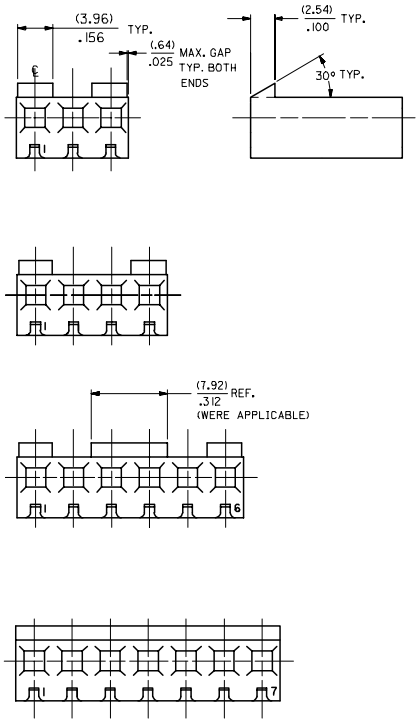

NO. OF CKT'S.	STANDARD RAMP IS LOCATED ON ℄ OF CKT. NOS.
2	ACROSS ENTIRE PART
3	1,3
4	1,4
5	1,3,5
6	1,3,4,6
7	ACROSS ENTIRE PART
8	1,3,6,8
9	ACROSS ENTIRE PART
10	1,3,5,6,8,10
11	ACROSS ENTIRE PART
12	1,3,5,8,10,12
13	1,3,5,7,9,11,13
14	1,3,5,7,8,10,12,14
15	1,3,5,7,9,11,13,15
16	1,3,5,7,10,12,14,16
17	1,3,5,7,9,11,13,15,17
18	1,3,5,7,9,10,12,14,16,18
19	1,3,5,7,9,11,13,15,17,19
20	1,3,5,7,9,12,14,16,18,20
21	1,3,5,7,9,11,13,15,17,19,21
22	1,3,5,7,9,11,12,14,16,18,20,22
23	1,3,5,7,9,11,13,15,17,19,21,23
24	1,3,5,7,9,11,14,16,18,20,22,24

STD. RAMP OPTION

, SEE CHART FOR RAMP LOCATIONS.

2139-NA-*				2139-NC-*			
ORDER NO.		ENG. NO.	VOIDS	ORDER NO.		ENG. NO.	VOIDS
09-50-3021	*	2139-2A		09-50-7021	*	2139-2C	
09-50-3031	*	2139-3A		09-50-7031	*	2139-3C	
09-50-3041	*	2139-4A		09-50-7041	*	2139-4C	
09-50-3051	*	2139-5A		09-50-7051	*	2139-5C	
09-50-3061	*	2139-6A		09-50-7061	*	2139-6C	
09-50-3071	*	2139-7A		09-50-7071	*	2139-7C	
09-50-3081	*	2139-8A		09-50-7081	*	2139-8C	
09-50-3091	*	2139-9A		09-50-7091	*	2139-9C	
09-50-3101	*	2139-10A		09-50-7101	*	2139-10C	
09-50-3111	*	2139-11A		09-50-7111	*	2139-11C	
09-50-3121	*	2139-12A		09-50-7121	*	2139-12C	
09-50-3131	*	2139-13A		09-50-7131	*	2139-13C	
09-50-3141	*	2139-14A		09-50-7141	*	2139-14C	
09-50-3151	*	2139-15A		09-50-7151	*	2139-15C	
09-50-3161	*	2139-16A		09-50-7161	*	2139-16C	
09-50-3171	*	2139-17A		09-50-7171	*	2139-17C	
09-50-3181	*	2139-18A		09-50-7181	*	2139-18C	
09-50-3191	*	2139-19A		09-50-7191	*	2139-19C	
09-50-3201	*	2139-20A		09-50-7201	*	2139-20C	
09-50-3211	*	2139-21A		09-50-7211	*	2139-21C	
09-50-3221	*	2139-22A		09-50-7221	*	2139-22C	
09-50-3231	*	2139-23A		09-50-7231	*	2139-23C	
09-50-3241	*	2139-24A		09-50-7241	*	2139-24C	
09-50-3036		2139-3A-2	2	09-50-7117		2139-11C-51	2,7,10
		2139-10A-2	2	09-50-7166		2139-16C-2	2
		2139-10A-51	2,5	09-50-7106		2139-10C-2	2
		2139-7A-2	2	09-50-7107		2139-10C-51	2,5
		2139-11A-51	2,7,10	09-50-7076		2139-7C-2	2
09-50-3163		2139-16A-2	2			2139-4C-3	3
09-50-3073		2139-10A-7	7	T 09-50-7108		2139-10C-4	4
09-50-3083		2139-10A-8	8	T 09-50-7109		2139-10C-5	5
09-50-3104		2139-10A-9	9			2139-5C-2	2
09-50-3162		2139-16A-51	2,15	09-50-3077		2139-7C-3	3
09-50-3092		2139-9A-51	2,6	09-50-3078		2139-7C-5	5
09-50-3075		2139-7A-51	1,7	09-50-7142		2139-14C-5	5
		2139-7A-6	6				
		2139-5A-51	2,4				
09-50-3047		2139-4A-3	3				
		2139-11A-2	2				
09-50-3052		2139-5A-4	4				
09-50-3076		2139-7A-52	4,7				
09-50-3125		2139-12A-5	5				
		2139-7A-3	3				
		2139-7A-5	5				
09-50-3053		2139-5A-2	2				
		2139-9A-2	2				
09-50-3127		2139-12A-2	2				
09-50-3143		2139-14A-2	2				
09-50-3202		2139-20A-2	2				
S		2139-9A-4	4				
09-50-3126		2139-12A-11	11				
09-50-3142		2139-14A-13	13				
09-50-3084		2139-8A-4	4				
09-50-3037		2139-3A-3	3				
09-50-3182		2139-18A-2	2				
09-50-3157		2139-15A-2	2				

UPDATE TITLE BLOCK
EC NO: UCP2006-0451 2005/12/09
DRWN: JLOWE 2005/12/12
CHKD: ADERR 2005/12/14
APPR: FSMITH
REV DESCRIPTION

QUALITY SYMBOLS
▼=0
▽=0

GENERAL TOLERANCES (UNLESS SPECIFIED)

	mm	INCH
4 PLACES	± ---	±---
3 PLACES	± ---	±.010
2 PLACES	± 0.25	±.014
1 PLACE	± 0.36	±---
ANGULAR ±1/2°		

DRAFT WHERE APPLICABLE MUST REMAIN WITHIN DIMENSIONS

DIMENSION STYLE: MM/IN
SCALE: ---
DESIGN UNITS: INCH
THIRD ANGLE PROJECTION

DRAWN BY	SAMIEC	DATE 1986/01/17
CHECKED BY	PATEL	DATE 1986/01/17
APPROVED BY	LENZ	DATE 1986/01/17

TITLE: CONNECTOR HOUSING FOR CRIMP TERMINAL 2139 SERIES DWG.

MOLEX INCORPORATED

MATERIAL NO.: SEE CHART
DOCUMENT NO.: SD-2139
SHEET NO.: 2 OF 4
SIZE: D

THIS DRAWING CONTAINS INFORMATION THAT IS PROPRIETARY TO MOLEX INCORPORATED AND SHOULD NOT BE USED WITHOUT WRITTEN PERMISSION

AE1

tb_frame_D_P_ME_T
Rev. D 2004/04/02