This document was generated on 06/04/2010

PLEASE CHECK WWW.MOLEX.COM FOR LATEST PART INFORMATION

Part Number: 0009017095
Status: Active
Overview: edge_card_connectors
Description: 3.96mm (.156") Pitch KK® Crimp Housing, Edge Card Connector, Single-Sided, Surface Mount, Polarized, With Flange, 9 Circuits, Rib between 2 & 3

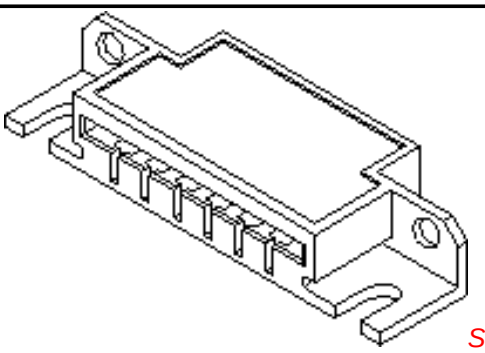

Series image - Reference only

Documents:

- 3D Model
- Drawing (PDF)
- Packaging Specification (PDF)
- RoHS Certificate of Compliance (PDF)

Agency Certification

UL	E29179

General

Product Family	Edge Card Connectors
Series	2574
Component Type	Edgecard to Wire
Overview	edge_card_connectors
Product Name	Edge Card, KK®

Physical

Circuits (Loaded)	9
Circuits (maximum)	9
Circuits Detail	All Signal
Color - Resin	Natural
Durability (mating cycles max)	25
Entry Angle	Vertical (Top Entry)
Flammability	94V-2
Keying to Mating Part	Yes
Material - Plating Mating	n/a
Material - Resin	Nylon
PCB Retention	None
PCB Thickness Recommended (in)	0.062 In
PCB Thickness Recommended (mm)	1.60 mm
Packaging Type	Bag
Panel Mount	With Flange
Pitch - Mating Interface (in)	0.156 In
Pitch - Mating Interface (mm)	3.96 mm
Polarized to Mating Part	Yes
Temperature Range - Operating	0°C to +75°C
Termination Interface: Style	N/A

Electrical

Current - Maximum per Contact	4.25A, 4.5A, 4.75A, 4A, 5A
Voltage - Maximum	250V

Material Info

Old Part Number	2574-09B2

Reference - Drawing Numbers

Packaging Specification	PK-2574-001
Sales Drawing	SD-2574

EU RoHS
ELV and RoHS Compliant
REACH SVHC
Contains SVHC: No
Halogen-Free Status
Not Reviewed

China RoHS

Need more information on product environmental compliance?

Email productcompliance@molex.com
For a multiple part number RoHS Certificate of Compliance, click here

Please visit the Contact Us section for any non-product compliance questions.

Search Parts in this Series
2574Series

Mates With
PCB, 1.6mm (0.62") max. thickness

Use With
2878 Terminals, 2478 Terminals, 2578 Terminals, Bifurcated

This document was generated on 06/04/2010

PLEASE CHECK WWW.MOLEX.COM FOR LATEST PART INFORMATION

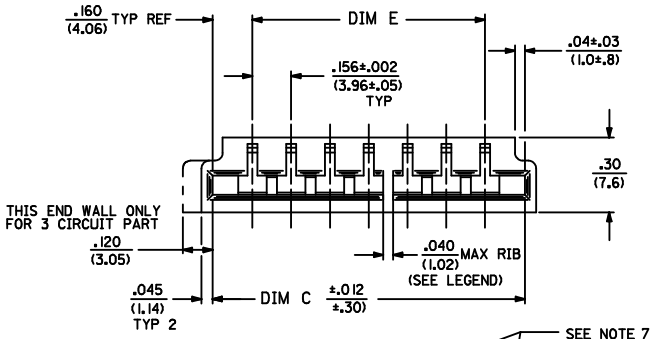

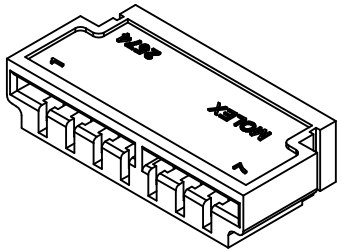

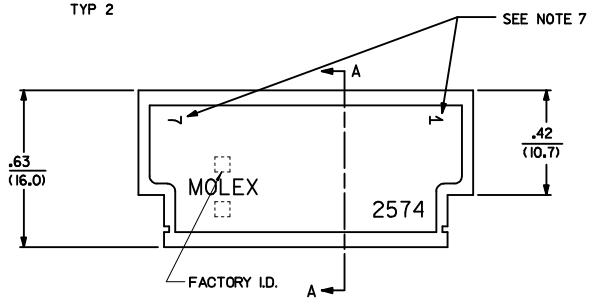

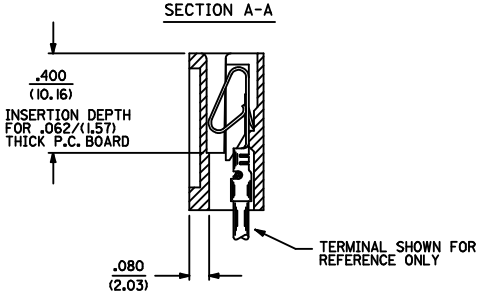

NOTES:

1. MATERIAL NYLON 6/6, 94V-2.
2. FINISH: SEE CRIMP TERMINAL DRAWING.
3. THIS PRODUCT CONFORMS TO PRODUCT SPECIFICATION PS-08-50.
4. PACKAGING: BULK PER PK-2574-001
5. CONNECTOR TO BE USED WITH CRIMP TERMINALS:
   2478-* 18-24 GAGE WIRE; .110/(2.79) MAX. INSULATION DIAMETER.
   2578-* 22-26 GAGE WIRE; .065/(1.65) MAX. INSULATION DIAMETER.
6. DIMENSIONS GIVEN ACROSS CENTERLINES ARE SYMMETRICAL ABOUT THOSE CENTERLINES WITHIN ONE HALF THE TOTAL TOLERANCE.
7. PARTS LESS THAN 7 CIRCUITS ARE TO INDICATE ONLY CIRCUIT NO. 1, ALL OTHERS ARE TO IDENTIFY BOTH THE FIRST AND LAST CIRCUITS.
8. PART CONFORMS TO CLASS B REQUIREMENTS OF COSMETIC SPECIFICATION PS-45499-002

2574 - N * * *

- NO. OF CIRCUITS
- OPTION CODE
- COLOR CODE: BLANK=NATURAL, BK=BLACK
- RIB LOCATION CODE (BETWEEN CKTS)

CODE	MOUNTING EARS	CHAMFERED SLOT	PCB THK	MOUNTING HOLES
A	NO	NO	.062	NO
B	YES	NO	.062	NO
C	NO	YES	.062	NO
D	YES	YES	.062	NO
E	NO	NO	.032	NO
F	YES	NO	.062	YES

RIB LOCATION CODE (BETWEEN CKTS)
1 = NONE
2 = 2-3
3 = 3-4
4 = 5-6
5 = 3-4, 5-6
6 = 4-5, 7-8
7 = 5-6, 8-9
8 = 5-6, 10-11
9 = 4-5, 7-8, 11-12
10 = 5-6, 10-11, 14-15
11 = 5-6, 10-11, 15-16
12 = 5-6, 11-12, 16-17
13 = 5-6, 11-12, 17-18
14 = 4-5, 7-8, 11-12, 15-16
15 = 4-5, 8-9, 12-13, 16-17, 20-21
16 = 5-6, 11-12, 18-19

SH.	REV.
3	C10
2	C10
1	C10

ADD PART NUMBERS
EC NO: UCP2009-0858 2008/12/29
DRWN:MKIPPER 2008/12/30
CHKD:SSOUSEK 2009/01/05
APPR:FSMITH
DESCRIPTION
REV C10

QUALITY SYMBOLS
▼=0
▽=0

GENERAL TOLERANCES (UNLESS SPECIFIED)

	mm	INCH
4 PLACES	± ---	± ---
3 PLACES	± ---	± .010
2 PLACES	± 0.25	± .015
1 PLACE	± 0.36	± ---
ANGULAR ±1/2°		

DRAFT WHERE APPLICABLE MUST REMAIN WITHIN DIMENSIONS

DIMENSION STYLE: IN/MM
SCALE: 4:1
DESIGN UNITS: INCH
THIRD ANGLE PROJECTION

DRAWN BY: PEREZ-ARGUET DATE: 1988/03/02
CHECKED BY: PATEL DATE: 1988/03/02
APPROVED BY: LENZ DATE: 1988/03/02
MATERIAL NO.: SEE CHART

TITLE: EDGE CARD CONNECTOR .156/(3.96) CENTERS CRIMP TYPE-2574 SERIES
MOLEX INCORPORATED
DOCUMENT NO.: SD-2574
SHEET NO.: 1 OF 3
SIZE: D

THIS DRAWING CONTAINS INFORMATION THAT IS PROPRIETARY TO MOLEX INCORPORATED AND SHOULD NOT BE USED WITHOUT WRITTEN PERMISSION

NO. OF CKT'S	DIM. C	DIM. D	DIM. E	DIM. A
3	.632 (16.05)	1.143 (29.03)	.312±.002 (7.92±.05)	.618 (15.70)
4	.788 (20.02)	1.224 (31.09)	.468±.002 (11.89±.05)	.774 (19.66)
5	.944 (23.98)	1.380 (35.05)	.624±.003 (15.85±.08)	.922 (23.42)
6	1.100 (27.94)	1.536 (39.01)	.780±.003 (19.81±.08)	1.078 (27.38)
7	1.256 (31.90)	1.692 (42.98)	.936±.003 (23.77±.08)	1.232 (31.29)
8	1.412 (35.86)	1.848 (46.94)	1.092±.004 (27.74±.10)	1.388 (35.26)
9	1.568 (39.83)	2.004 (50.90)	1.248±.004 (31.70±.10)	1.544 (39.22)
10	1.724 (43.79)	2.160 (54.86)	1.404±.006 (35.66±.15)	1.700 (43.18)
11	1.880 (47.75)	2.316 (58.83)	1.560±.006 (39.62±.15)	1.854 (47.09)
12	2.036 (51.71)	2.472 (62.79)	1.716±.006 (43.59±.15)	2.010 (51.05)
13	2.192 (55.68)	2.628 (66.75)	1.872±.006 (47.55±.15)	2.164 (54.97)
14	2.348 (59.64)	2.784 (70.71)	2.028±.007 (51.51±.18)	2.318 (58.88)
15	2.504 (63.60)	2.940 (74.68)	2.184±.007 (55.47±.18)	2.474 (62.84)
16	2.660 (67.56)	3.096 (78.64)	2.340±.007 (59.44±.18)	2.631 (66.83)
17	2.816 (71.53)	3.252 (82.60)	2.496±.008 (63.40±.20)	2.784 (70.71)
18	2.972 (75.49)	3.408 (86.56)	2.652±.009 (67.36±.23)	2.954 (75.03)
19	3.128 (79.45)	3.564 (90.53)	2.808±.009 (71.32±.23)	3.095 (78.61)
20	3.284 (83.41)	3.720 (94.49)	2.964±.009 (75.29±.23)	3.251 (82.58)
21	3.440 (87.38)	3.876 (98.45)	3.120±.010 (79.25±.25)	3.407 (86.54)
22	3.596 (91.34)	4.032 (102.41)	3.276±.011 (83.21±.25)	3.562 (90.47)
23	3.752 (95.30)	4.188 (106.38)	3.432±.011 (87.17±.28)	3.716 (94.39)
24	3.908 (99.26)	4.344 (110.34)	3.588±.012 (91.14±.30)	3.871 (98.32)

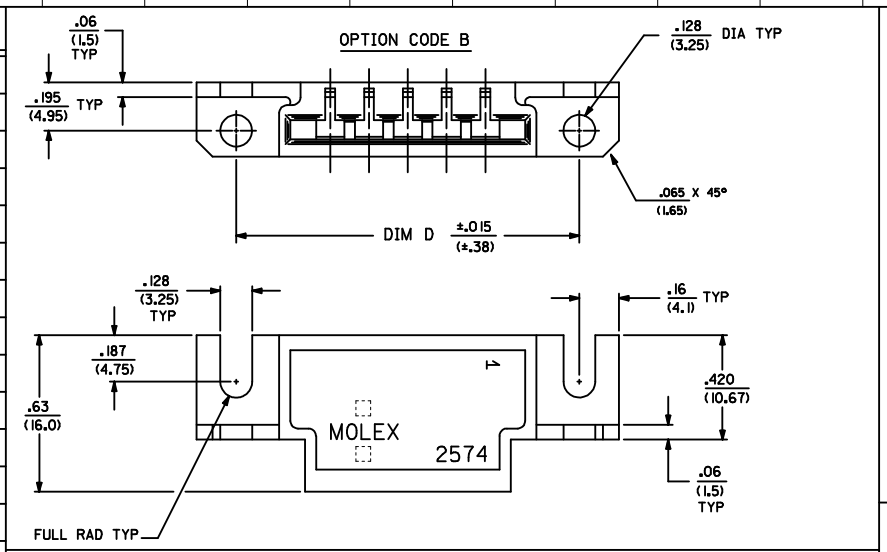

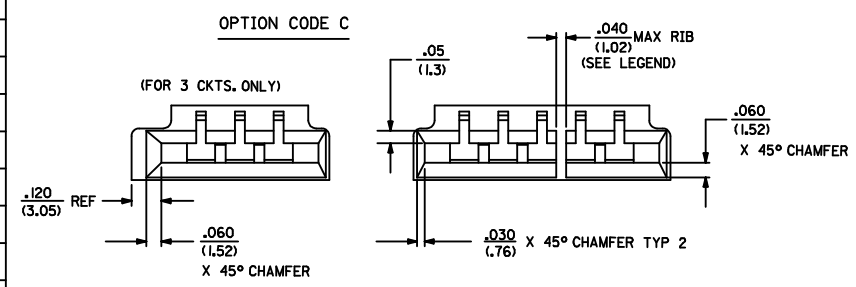

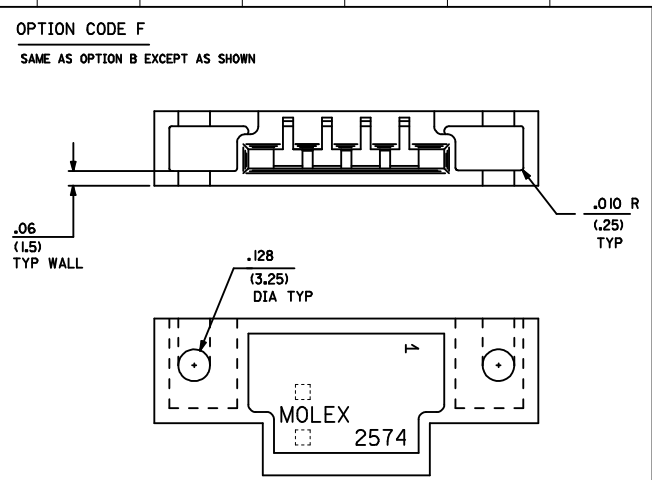

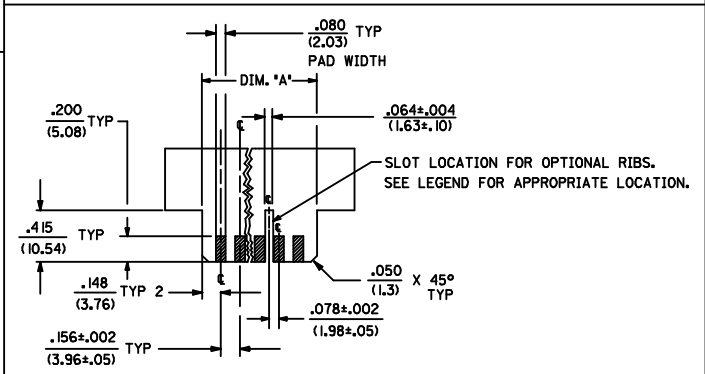

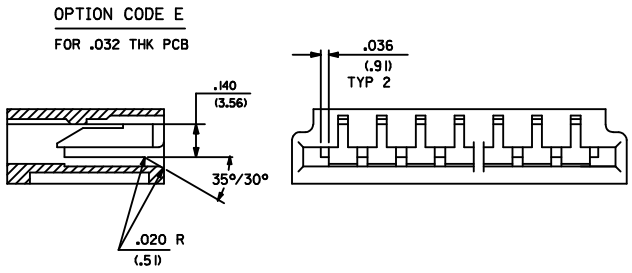

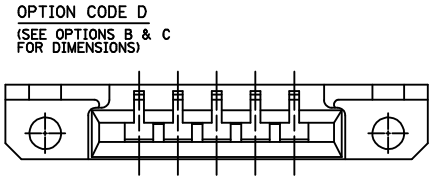

REVISE FACTORY I.D.
EC NO: UCP2009-0858 2008/12/29
DRWN:MKIPPER 2008/12/30
CHKD:SSOUSEK 2009/01/05
APPR:FSMITH
DESCRIPTION
REV
C10

QUALITY SYMBOLS
▼=0
▽=0

GENERAL TOLERANCES (UNLESS SPECIFIED)

	mm	INCH
4 PLACES	± ---	± ---
3 PLACES	± ---	±.005
2 PLACES	±0.13	±.01
1 PLACE	±0.25	± ---
ANGULAR ±1/2°		

DRAFT WHERE APPLICABLE MUST REMAIN WITHIN DIMENSIONS

DIMENSION STYLE: IN/MM
SCALE: ---
DESIGN UNITS: INCH
THIRD ANGLE PROJECTION

DRAWN BY: PEREZ-ARGUET DATE: 1988/03/02
CHECKED BY: PATEL DATE: 1988/03/02
APPROVED BY: LENZ DATE: 1988/03/02
MATERIAL NO.: SEE CHART
SIZE: D

TITLE: EDGE CARD CONNECTOR .156/(3.96) CENTERS CRIMP TYPE-2574 SERIES
MOLEX INCORPORATED
DOCUMENT NO.: SD-2574
SHEET NO.: 2 OF 3

THIS DRAWING CONTAINS INFORMATION THAT IS PROPRIETARY TO MOLEX INCORPORATED AND SHOULD NOT BE USED WITHOUT WRITTEN PERMISSION

2574-NA*		2574-NB*		2574-NC*		2574-ND*		2574-NE*		2574-NF*	
PART NO.	ENG. NO. (SUFFIX ONLY)	PART NO.	ENG. NO. (SUFFIX ONLY)	PART NO.	ENG. NO. (SUFFIX ONLY)	PART NO.	ENG. NO. (SUFFIX ONLY)	PART NO.	ENG. NO. (SUFFIX ONLY)	PART NO.	ENG. NO. (SUFFIX ONLY)
09-01-6031	-3A1	09-01-7031	-3B1	09-01-6038	-3C1		-3D1		-4E1	09-01-7065	-6F1-BK
09-01-6041	-4A1	09-01-7041	-4B1	009-01-6048	-04C1	09-01-6082	-08D1		-6E1	09-01-7087	-8F1-BK
09-01-6051	-5A1	09-01-7051	-5B1	09-01-6088	-08C1		-20D1				
09-01-6064	-6A1	09-01-7064	-6B1		-20C1						
09-01-6081	-8A1	09-01-7081	-8B1								
	-8A1D	09-01-7069	-6B1D								
09-01-6055	-5A2		-8B1D								
09-01-6061	-6A2	09-01-7061	-6B2								
09-01-6085	-8A2	09-01-7085	-8B2								
09-01-6095	-9A2	09-01-7095	-9B2								
09-01-6071	-7A3	09-01-7071	-7B3								
09-01-6086	-8A3	09-01-7086	-8B3								
09-01-6083	-8A4	09-01-7083	-8B4								
09-01-6094	-9A4	09-01-7094	-9B4								
09-01-6091	-9A5	09-01-7091	-9B5								
09-01-6101	-10A6	09-01-7101	-10B6								
09-01-6121	-12A7	09-01-7121	-12B7								
09-01-6129	-12A4	09-01-7129	-12B4								
09-01-6181	-18A8	09-01-7181	-18B8								
09-01-6151	-15A9	09-01-7151	-15B9								
09-01-6161	-16A9	09-01-7161	-16B9								
09-01-6171	-17A10	09-01-7171	-17B10								
09-01-6211	-21A11	09-01-7211	-21B11								
09-01-6224	-22A12	09-01-7224	-22B12								
09-01-6221	-22A13	09-01-7221	-22B13								
09-01-6191	-19A14	09-01-7191	-19B14								
09-01-6241	-24A15	09-01-7241	-24B15								
09-01-7222	-22A16		-6B1-BK								

ADD PART NUMBERS
EC NO: UCP2009-0858 2008/12/29
DRWN:MKIPPER 2008/12/30
CHKD:SSOUSEK 2009/01/05
APPR:FSMITH
DESCRIPTION
REV
C10

QUALITY SYMBOLS
▼=0
▽=0

GENERAL TOLERANCES (UNLESS SPECIFIED)

	mm	INCH
4 PLACES	± ---	± ---
3 PLACES	± ---	± ---
2 PLACES	± ---	± ---
1 PLACE	± ---	± ---

ANGULAR ±1/2°

DRAFT WHERE APPLICABLE MUST REMAIN WITHIN DIMENSIONS

DIMENSION STYLE: IN/MM
SCALE: ---
DESIGN UNITS: INCH
THIRD ANGLE PROJECTION

DRAWN BY: PEREZ-ARGUET DATE: 1988/03/02
CHECKED BY: PATEL DATE: 1988/03/02
APPROVED BY: LENZ DATE: 1988/03/02
MATERIAL NO.: SEE CHART
DOCUMENT NO.: SD-2574
SHEET NO.: 3 OF 3
SIZE: D

TITLE: EDGE CARD CONNECTOR .156/(3.96) CENTERS CRIMP TYPE-2574 SERIES

MOLEX INCORPORATED

THIS DRAWING CONTAINS INFORMATION THAT IS PROPRIETARY TO MOLEX INCORPORATED AND SHOULD NOT BE USED WITHOUT WRITTEN PERMISSION