Part Number: 0008650115
Status: Active
Overview: kk
Description: 3.96mm (.156") Pitch KK® Crimp Terminal 2478, 18-24 AWG, Bag, Phosphor Bronze, 0.38µm (15µ") Selective Gold (Au)

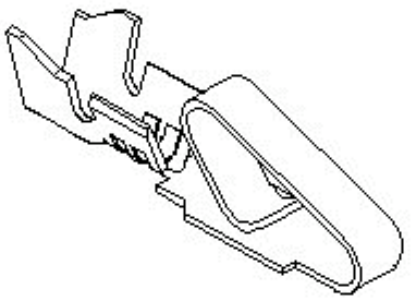

Series image - Reference only

Documents:
Drawing (PDF)
RoHS Certificate of Compliance (PDF)
Product Specification PS-08-50 (PDF)

General

Product Family	Crimp Terminals
Series	2478
Crimp Quality Equipment	Yes
Overview	kk
Product Name	KK®

Physical

Gender	Female
Material - Metal	Phosphor Bronze
Material - Plating Mating	Gold
Material - Plating Termination	Gold
Packaging Type	Bag
Plating min: Mating (µin)	15
Plating min: Mating (µm)	0.375
Plating min: Termination (µin)	15
Plating min: Termination (µm)	0.375
Termination Interface: Style	Crimp or Compression
Wire Insulation Diameter	2.79mm (.110") max.
Wire Size AWG	18, 20, 22, 24
Wire Size mm²	N/A

Material Info

Old Part Number	2478-3-(555)L

Reference - Drawing Numbers

Packaging Specification	PK-2759-001
Product Specification	PS-08-50
Sales Drawing	SD-2478

EU RoHS
ELV and RoHS Compliant
REACH SVHC
Contains SVHC: No
Halogen-Free Status
Halogen-Free

China RoHS

Need more information on product environmental compliance?

Email productcompliance@molex.com
For a multiple part number RoHS Certificate of Compliance, click here

Please visit the Contact Us section for any non-product compliance questions.

Search Parts in this Series
2478Series

Use With
2574 , 2139 , 41695 , 3069 , 6422 , 5265 , 5239

Application Tooling | **FAQ**
Tooling specifications and manuals are found by selecting the products below. Crimp Height Specifications are then contained in the Application Tooling Specification document.

Global

Description	Product #
Hand Crimper	0638117500
Extraction Tool	0011030016

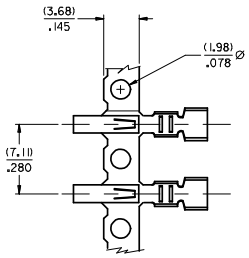

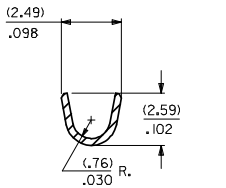

OPTIONAL SECTION A-A (D-OPTION)
(SEE NOTE 8)

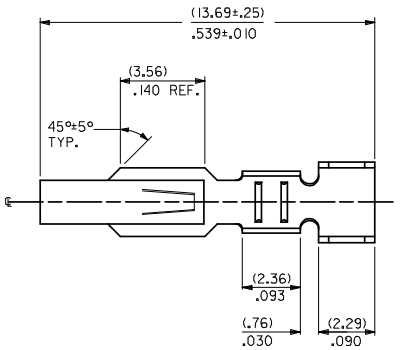

2478- ✱✱ – ✱ – ✱

MATERIAL CODE
(.27)/.0106 THK
1 =BRASS
3=PHOS BRONZE

OPTION CODE
BLANK=AS SHOWN
C=CAT EAR OPTION
D=OPTIONAL CONDUCTOR CRIMP (FOR IRELAND) (SEE OPT. SECTION A-A) WITHOUT CAT EARS
E=LOW INSERTION FORCE OPTION

WINDING SPEC.
A=PER ES-339-A
BLANK=PER ES-339-B
L=LOOSE

FINISH: PER SDES-88
(P909) *OVERALL HOT TIN DIP: 2.54 MICROMETERS MIN.
(550) SELECT GOLD: 0.38 MICROMETERS MIN.
OVERALL GOLD FLASH: 0.05 MICROMETERS MIN.
OVERALL NICKEL UNDERPLATE: 0.76 MICROMETERS MIN.
(555) SELECT GOLD: 0.38 MICROMETERS MIN.
OVERALL NICKEL UNDERPLATE: 0.76 MICROMETERS MIN.

*THE PRIMARY SHIPPING CARTON WILL BE LABELED "COMPLIANT TO RoHS DIRECTIVE 2002/95/EC AND ELV ANNEX II OF DIRECTIVE 2000/53/EC". CARTONS WITHOUT THIS LABEL MAY CONTAIN PRODUCT WITH TIN/LEAD PLATING.

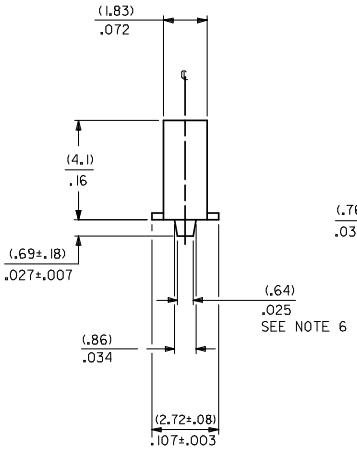

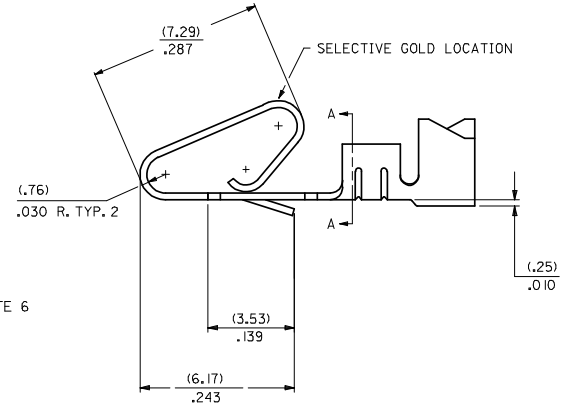

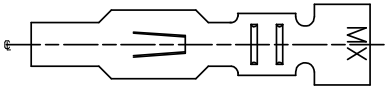

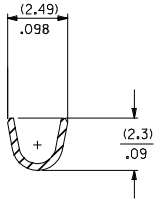

SECTION A-A
BACKGROUND OMITTED

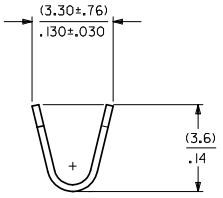

BACKGROUND OMITTED

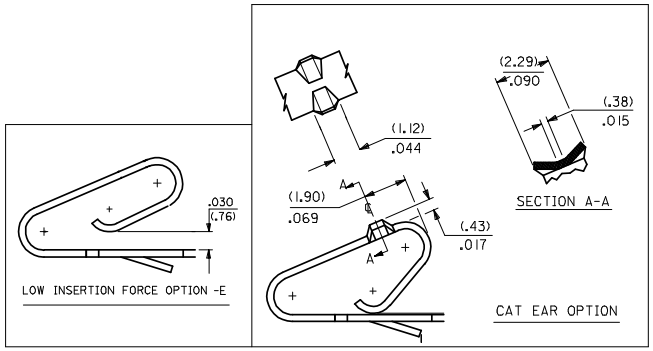

NOTES:
1. CRIMP ACCEPTS 18 TO 24 GA. WIRE WITH (2.79)/.110 MAX. INSUL. DIA; WHEN USED WITH 2574 CONNECTOR. (2.54)/.100 MAX. INSUL. DIA. WHEN USED WITH 2139 CONNECTOR; HOUSING 41695 IS RECOMMENDED FOR OVER (2.54)/.100 DIA. INSULATION. CRIMP ACCEPTS (3.00)/.118 MAX . INSUL. DIA. WITH SPECIAL TOOLING.
2. DIMENSIONS GIVEN ACROSS CENTERLINES ARE SYMMETRICAL ABOUT THOSE CENTERLINES WITHIN HALF THE TOTAL TOLERANCE.
3.
6. (.86±.05)/.034±.002 IS AN OPTIONAL DESIGN.
7. THIS PART CONFORMS TO PRODUCT SPEC. 08-50.
8. CONDUCTOR CRIMP FOR 16 AWG. WIRE WITH .110 MAX. INSULATION DIA.

CHANGE TO ME10
EC NO: UCP2005-0902 2004/11/16
DRWN:ADRATNOL 20040113128
CHKD:SAMIEC 20040113128
APPR:MARGULIS 20040128
DESCRIPTION
REV W

QUALITY SYMBOLS
▼=0
▽=0

GENERAL TOLERANCES (UNLESS SPECIFIED)

	mm	INCH
4 PLACES	± ---	± ---
3 PLACES	± ---	± .010
2 PLACES	± 0.25	± .014
1 PLACE	± 0.36	± ---
ANGULAR ±1/2°		

DRAFT WHERE APPLICABLE MUST REMAIN WITHIN DIMENSIONS

DIMENSION STYLE: IN/MM
SCALE
DESIGN UNITS: INCH
THIRD ANGLE PROJECTION

DRAWN BY	SAMIEC	DATE 06/03/86
CHECKED BY	PATEL	DATE 06/03/86
APPROVED BY	LENZ	DATE 06/03/86

TITLE
CRIMP TERMINAL
.156 CENTERS
18 TO 24 GA WIRE

MOLEX INCORPORATED

MATERIAL NO. SEE CHART
DOCUMENT NO. SD-2478
SHEET NO. 1 OF 2
SIZE D

THIS DRAWING CONTAINS INFORMATION THAT IS PROPRIETARY TO MOLEX INCORPORATED AND SHOULD NOT BE USED WITHOUT WRITTEN PERMISSION

2478-1-(•••)•

	PART NO.	ENG. NO.
	08-50-0105	2478-1-(P909)
	08-50-0106	2478-1-(P909)L
	08-56-0105	2478-1-(550)
	08-56-0106	2478-1-(550)L
	08-55-0103	2478-1-(555)
	08-55-0104	2478-1-(555)L
	08-50-0146	2478-1-(109)
	08-50-0147	2478-1-(109)L
	08-50-0119	2478-1-(122)
	08-50-0120	2478-1-(122)L
I	08-50-0271	2478-1-(P909)A
		2478-1-(550)A
	08-56-0153	2478-1-(507)
	08-56-0154	2478-1-(507)L
		2478-1-(506)
		2478-1-(506)L
I	08-50-0015	2478-1-(102)
I	08-50-0016	2478-1-(102)L
I	08-52-0114	2478-1-(P909)
I	08-52-0115	2478-1-(P909)L
		2478-1-(132)
		2478-1-(132)L
	08-50-0001	2478-1-(P224)
	08-50-0006	2478-1-(P224)L
I	08-50-0063	2478-1-(224)
I	08-50-0064	2478-1-(224)L
	08-55-0133	2478-1-(561)
	08-55-0134	2478-1-(561)L
	08-50-0073	2478-1-(P102)
	08-50-0074	2478-1-(P102)L

2478-3-(•••)•

	PART NO.	ENG. NO.
	08-52-0071	• 2478-3-(P909)
	08-52-0072	• 2478-3-(P909)L
	08-65-0114	• 2478-3-(555)
	08-65-0115	• 2478-3-(555)L
	08-52-0073	2478-3-(P102)
	08-52-0074	2478-3-(P102)L
	08-52-0811	2478-3-(102)
	08-52-0812	2478-3-(102)L
	08-50-0281	2478-3-(122)
		2478-3-(122)L
	08-58-0121	• 2478-3-(550)
	08-58-0122	• 2478-3-(550)L
	08-58-0103	2478-3-(591)
	08-58-0104	2478-3-(591)L
	08-58-0114	2478-3-(558)
	08-58-0115	2478-3-(558)L

2478-1C-(•••)•

	PART NO.	ENG. NO.
	08-50-0014	2478-1C-(P909)
	08-50-0045	2478-1C-(P909)L
	08-50-0047	2478-1C-(P102)
	08-50-0046	2478-1C-(P102)L
	08-50-0091	2478-1C-(102)
	08-50-0093	2478-1C-(102)L

2478-3C-(•••)•

	PART NO	ENG NO
	08-52-0044	2478-3C-(P909)
	08-52-0045	2478-3C-(P909)L
	08-52-0023	2478-3C-(102)
	08-52-0024	2478-3C-(102)L
	08-52-0027	2478-3C-(122)
		2478-3C-(122)L
	08-52-0047	2478-3C-(P102)L
	08-52-0046	2478-3C-(P102)

2478-1D-(•••)•

	PART NO.	ENG. NO.
	08-50-0055	2478-1D-(P909)
	08-50-0056	2478-1D-(P909)L

2478-3E-(•••)•

	PART NO.	ENG. NO.
		2478-3E-(P909)
		2478-3E-(P909)L
		2478-3E-(555)
		2478-3E-(555)L
		2478-3E-(550)
		2478-3E-(550)L

LTR.	REVISIONS	LTR.	REVISIONS
	SEE SHEET 1		SEE SHEET 1
	SEE SHEET 1		SEE SHEET 1
	SEE SHEET 1		SEE SHEET 1
	SEE SHEET 1		SEE SHEET 1
	SEE SHEET 1		SEE SHEET 1
	SEE SHEET 1		SEE SHEET 1
	SEE SHEET 1	V	SEE SHEET 1

DIMENSIONS SHOWN (METRIC) INCH
UNLESS OTHERWISE SPECIFIED TOLERANCES: ANGULAR ± 1/2°

	INCH	METRIC
3 PLACE	± ---	---
2 PLACE	± ---	± ---
1 PLACE	---	± ---

DRAFT WHERE APPLICABLE MUST REMAIN WITHIN DIMENSIONS

DRWG. BY SAMIEC | CHK'D. BY PATEL
APP'D. BY ADAMIK | SCALE :

▽ = 0 ▼ = 0 REVISE ONLY ON CAD SYSTEM

TITLE
CRIMP TERMINAL
.156 ℄
18/24 AWG WIRE

MOLEX INCORPORATED
LISLE, ILL. 60532 U.S.A.

SHEET NO. 2 | DATE 06/12/86

PART NO. SEE CHARTS | DRWG. NO. SD-2478

FILE NAME

THIS DRAWING CONTAINS INFORMATION THAT IS PROPRIETARY TO MOLEX INC. AND SHOULD NOT BE USED WITHOUT WRITTEN PERMISSION.

DIV. KK | SIZE D