Staggered Stacker: BTB

00-9188

AVX INTERCONNECT
A KYOCERA GROUP COMPANY

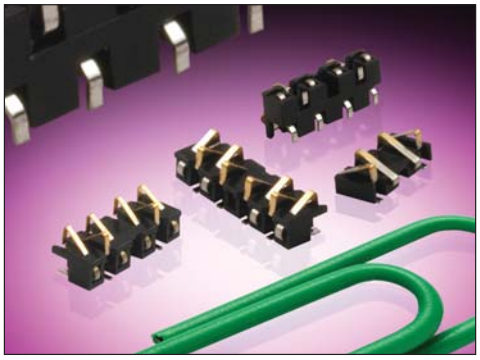

The SOLO series 9188 is a one-piece connector used to connect two PCBs in a cost effective manner.

A standard range is available with 4, 6, 8 staggered contacts to suit stack heights of 1.1mm to 2.1mm (see table below).

SOLO Stacker is designed for PCB surface mounting and is supplied in tape and reel packaging. Gold plated pads on the mating PCB or suitable flex circuits provide connection between the two boards.

APPLICATIONS

- Phones
- Scanners
- Radios
- Medical Diagnostic
- Security Devices

FEATURES AND BENEFITS

Single piece connector – no mating half required to connect two boards together which means:

- Reduced assembly time
- Only one part to purchase and stock
- Due to the unique contact design, the mating device does not have to be parallel
- Helps reduce tolerance accumulation within system

ELECTRICAL

- Current Rating: 1 Amp/Contact
- Voltage Rating: 125V
  Based on placement distance

ENVIRONMENTAL

- Operating Temperature:
  -55ºC to +125ºC

MECHANICAL

- Insulator Material: High Temperature Plastic; UL94 HB
- Contact Material: Beryllium Copper
- Plating: Gold over Nickel
- Durability: 50 Cycles

HOW TO ORDER

00 — **Prefix**

9188 — **Series**

00X — **Number of Ways**
004 = 4
006 = 6
008 = 8

0XX — **Stack Height**

Code	Height	No. of Ways
012	1.1mm to 1.3mm	4 only
020	1.9mm to 2.1mm	4, 6, & 8

062 — **Plating Variation**
062 = Selective Gold
0.25µm Gold Plated
Contact Nose Pure
Tin Tail

RoHS COMPLIANT

4 WAY STAGGERED STACKER – 1.2MM HEIGHT

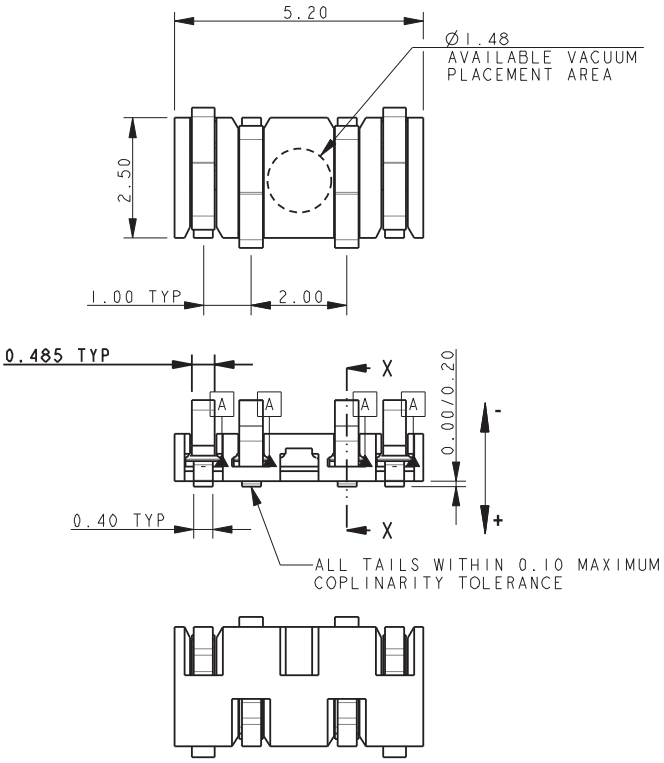

MATING CONDITION

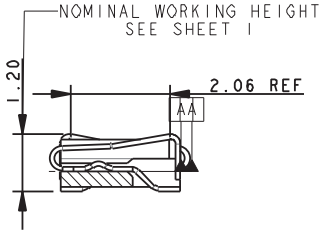

SECTION ON X-X

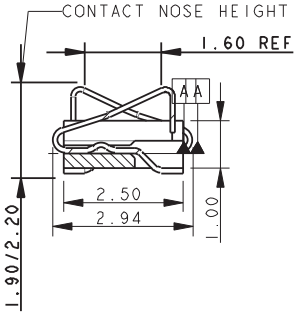

SMT PCB FOOTPRINT

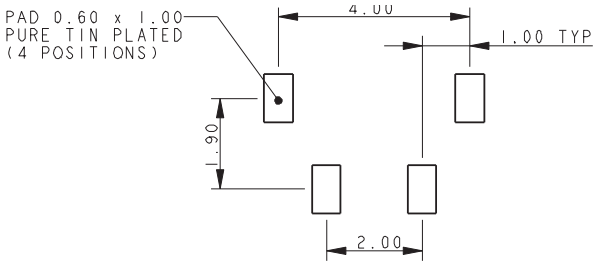

NOTES:

1. GENERAL TOLERANCE ±0.20 UNLESS SPECIFIED.
2. FOR FULL PRODUCT SPECIFICATION REFER TO ELCO SPECIFICATION 201-01-121.
3. INSULATOR MATERIAL: HIGH TEMPERATURE PLASTIC UL94 HB. COLOR BLACK.
4. CONTACT MATERIAL: COPPER ALLOY.
5. CONTACT PLATING: 1.0µM NICKEL UNDERPLATED. SELECTIVE 0.25µM GOLD ON NOSE. 2.0 TO 4.0µM PURE TIN ON TAILS.
6. PACKING 2000 PIECES ON A 330MM REEL.

MATING PCB FOOTPRINT

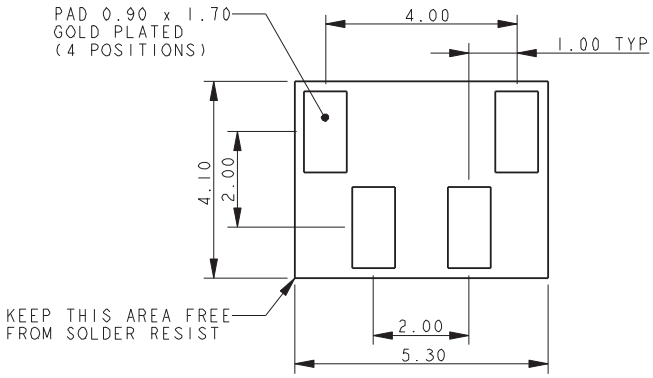

PACKING DETAILS

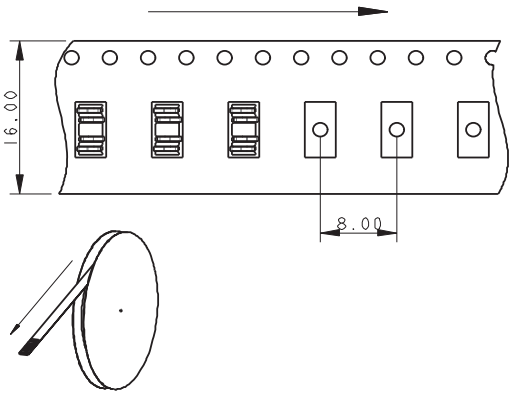

Staggered Stacker: BTB

00-9188

4 WAY STAGGERED STACKER – 2.0MM HEIGHT

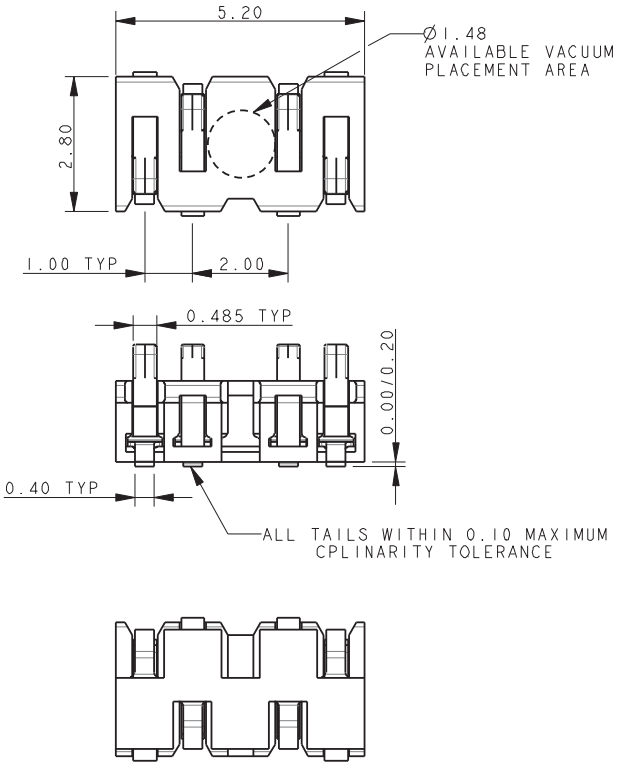

MATING CONDITION

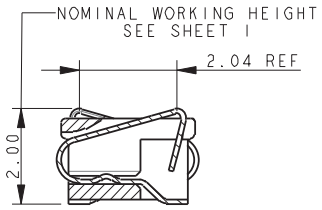

SECTION ON X-X

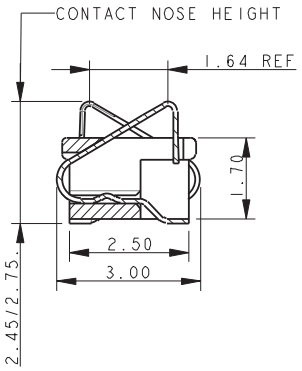

SMT PCB FOOTPRINT

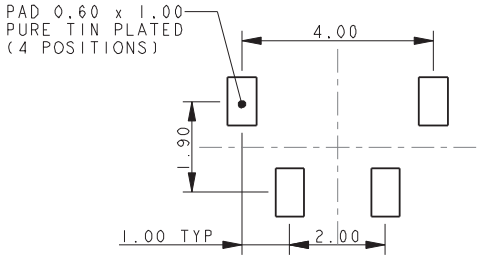

NOTES:

1. GENERAL TOLERANCE ±0.20 UNLESS SPECIFIED.
2. FOR FULL PRODUCT SPECIFICATION REFER TO ELCO SPECIFICATION 201-01-121.
3. INSULATOR MATERIAL: HIGH TEMPERATURE PLASTIC UL94 HB. COLOR BLACK.
4. CONTACT MATERIAL: COPPER ALLOY.
5. CONTACT PLATING: 1.0µM NICKEL UNDERPLATED. SELECTIVE 0.25µM GOLD ON NOSE. 2.0 TO 4.0µM PURE TIN ON TAILS.
6. PACKING 2000 PIECES ON A 330MM REEL.

MATING PCB FOOTPRINT

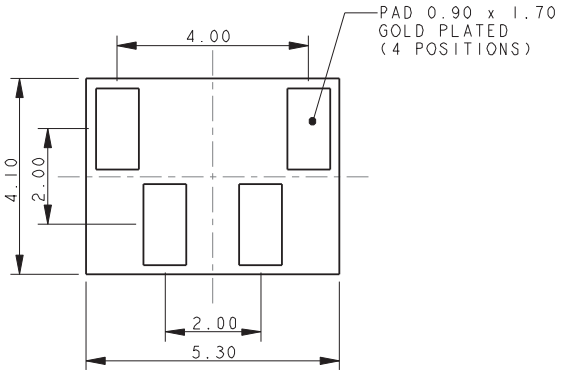

PACKING DETAILS

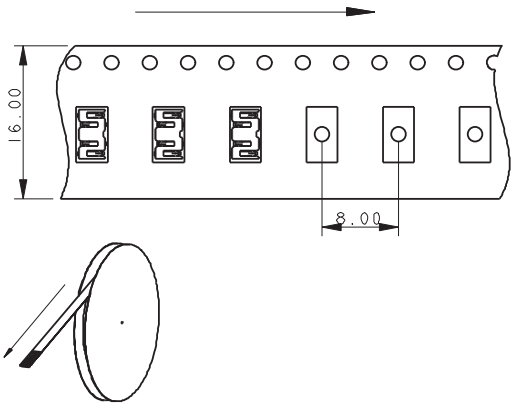

6 WAY STAGGERED STACKER – 2.0MM HEIGHT

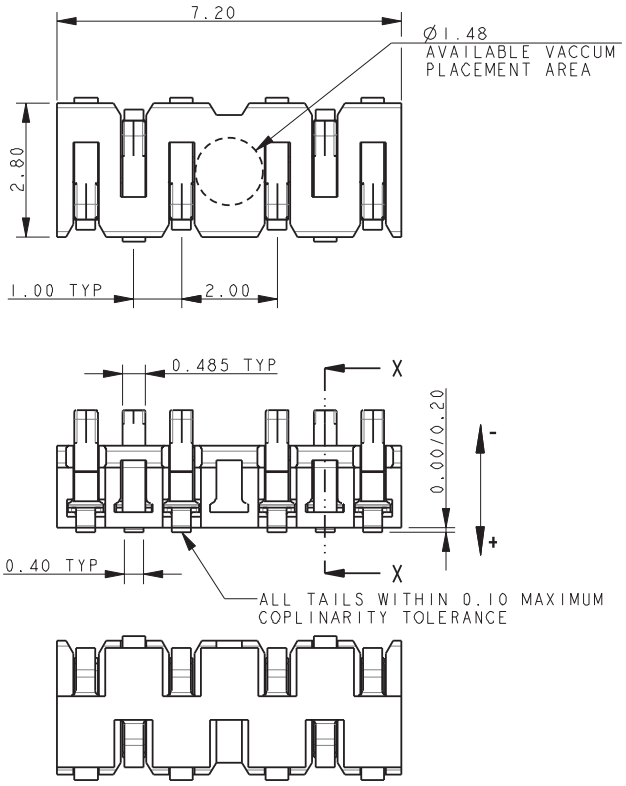

MATING CONDITION

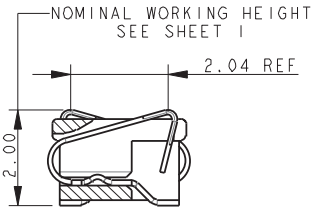

SECTION ON X-X

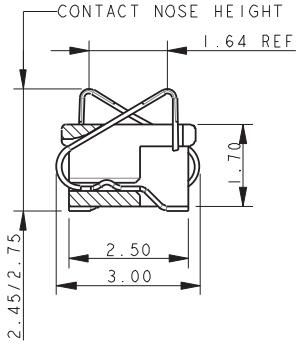

SMT PCB FOOTPRINT

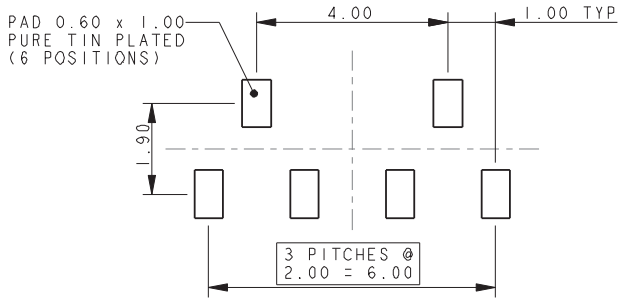

NOTES:
1. GENERAL TOLERANCE ±0.20 UNLESS SPECIFIED.
2. FOR FULL PRODUCT SPECIFICATION REFER TO ELCO SPECIFICATION 201-01-121.
3. INSULATOR MATERIAL: HIGH TEMPERATURE PLASTIC UL94 HB. COLOR BLACK.
4. CONTACT MATERIAL: COPPER ALLOY.
5. CONTACT PLATING: 1.0µM NICKEL UNDERPLATED. SELECTIVE 0.25µM GOLD ON NOSE. 2.0 TO 4.0µM PURE TIN ON TAILS.
6. PACKING 2000 PIECES ON A 330MM REEL.

MATING PCB FOOTPRINT

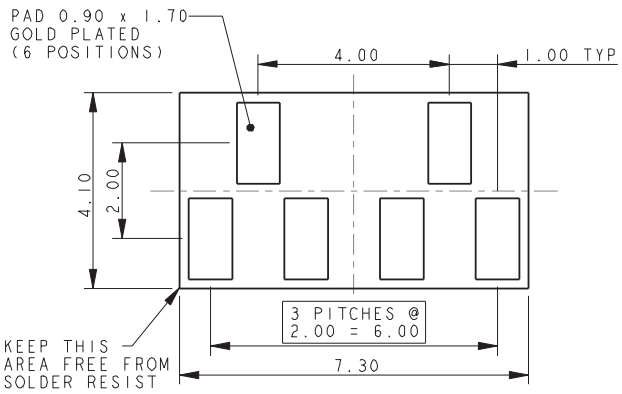

PACKING DETAILS

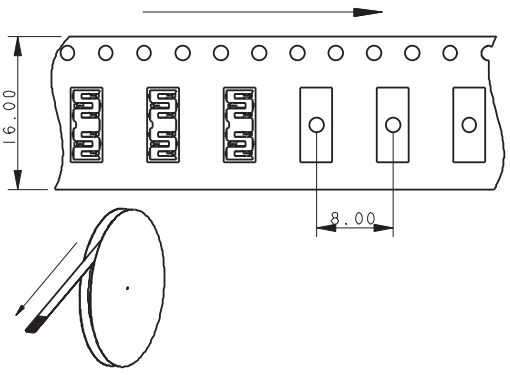

8 WAY STAGGERED STACKER – 2.0MM HEIGHT

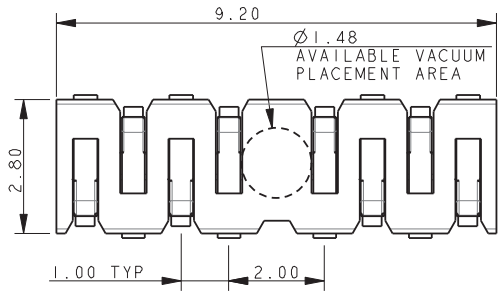

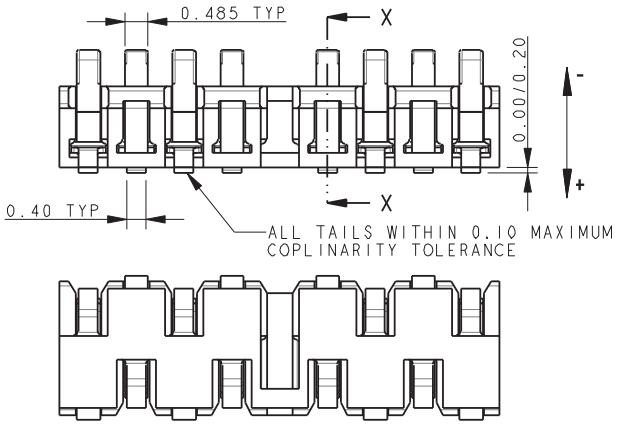

MATING CONDITION

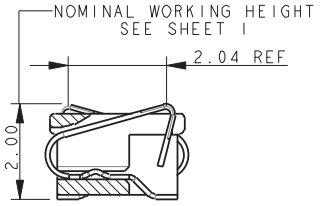

SECTION ON X-X

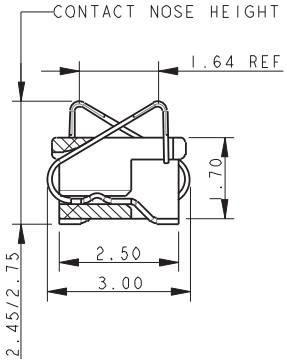

SMT PCB FOOTPRINT

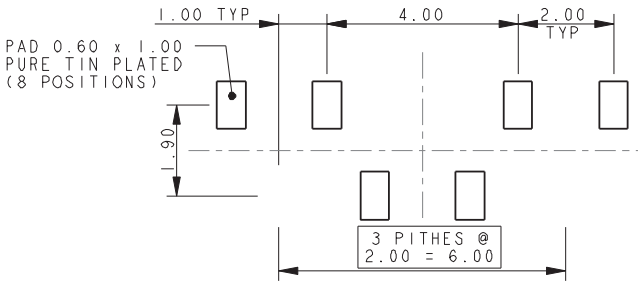

NOTES:
1. GENERAL TOLERANCE ±0.20 UNLESS SPECIFIED.
2. FOR FULL PRODUCT SPECIFICATION REFER TO ELCO SPECIFICATION 201-01-121.
3. INSULATOR MATERIAL: HIGH TEMPERATURE PLASTIC UL94 HB. COLOR BLACK.
4. CONTACT MATERIAL: COPPER ALLOY.
5. CONTACT PLATING: 1.0µM NICKEL UNDERPLATED. SELECTIVE 0.25µM GOLD ON NOSE. 2.0 TO 4.0µM PURE TIN ON TAILS.
6. PACKING 2000 PIECES ON A 330MM REEL.

MATING PCB FOOTPRINT

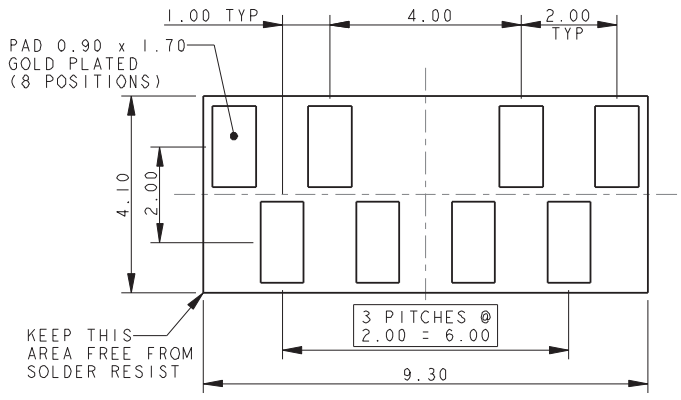

PACKING DETAILS

