THIS DRAWING IS UNPUBLISHED. RELEASED FOR PUBLICATION 2011
© COPYRIGHT 2011 BY - ALL RIGHTS RESERVED.

LOC	DIST
1	-

REVISIONS

P	LTR	DESCRIPTION	DATE	DWN	APVD
	5	UPDATED	23JUL2013	MZ	JC
	A	PARTS RELEASED FOR PRODUCTION	14NOV2013	KR	JC

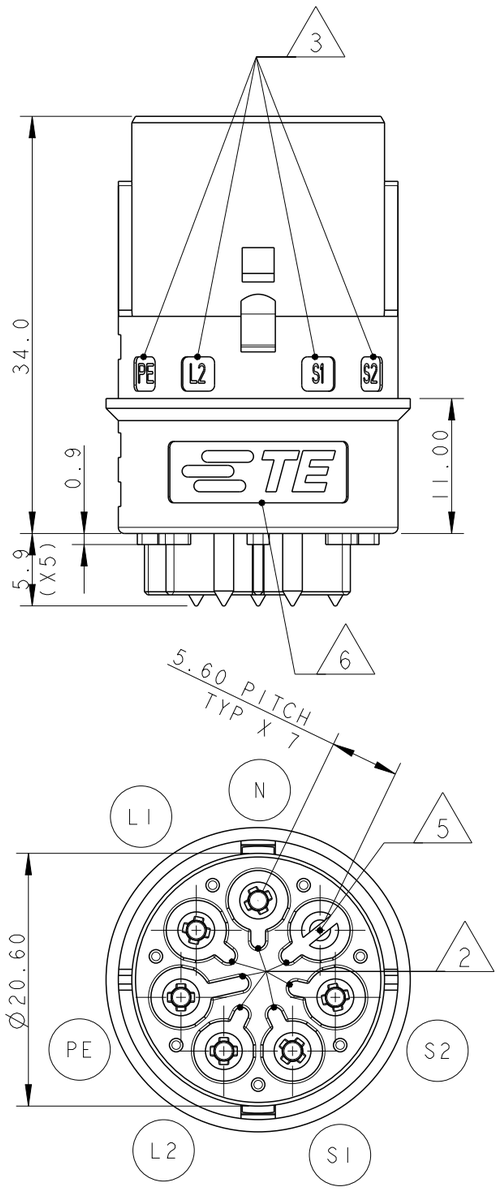

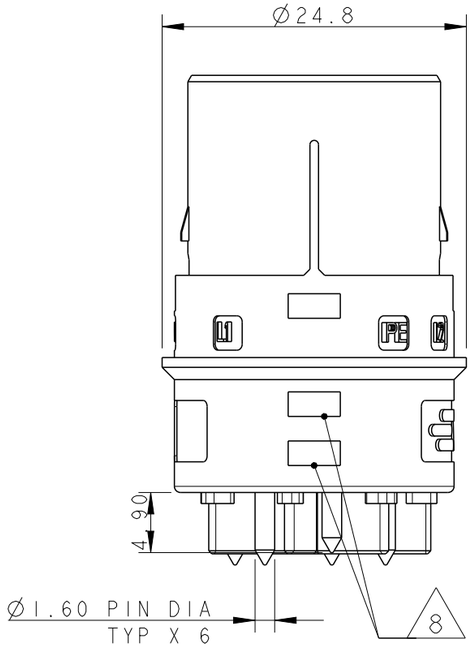

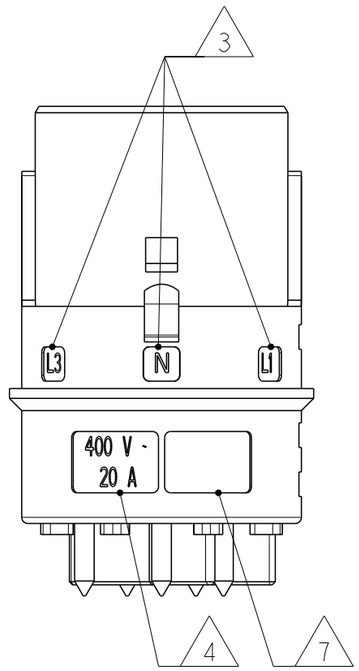

NOTES:

1. MATERIAL: PA GF (NATURAL)
   - HOUSING: PA GF
   - CONTACTS: BRASS TIN PLATED
2. ALL POLARIZATION KEYS SHOWN FOR REF ONLY
3. WAYS I.D.
4. VOLTAGE AND CURRENT RATINGS
5. RIB CLOSING CAVITY BY CHANGE OVER
6. TE LOGO
7. AREA FOR AGENCIES APPROVAL LOGO
8. VISUAL INDICATOR FOR PE CONDUCTOR

SCALE 1:1

PCB CUT-OUT AND HOLES DIMENSIONS (±0.03)

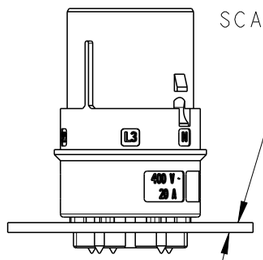

BOTTOM VIEW

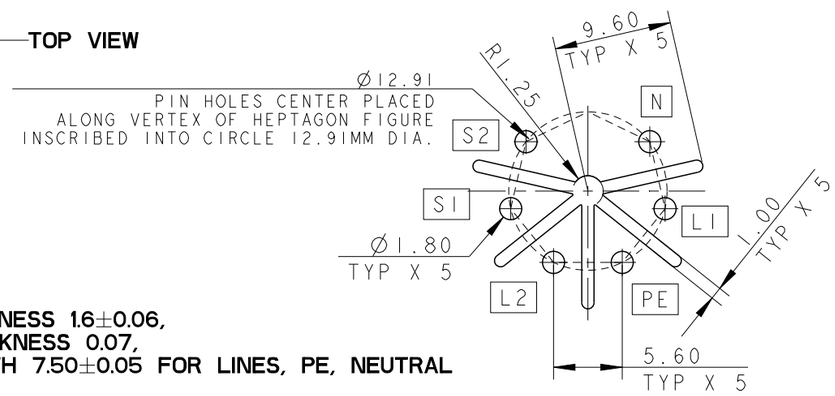

RACOMANDED PCB THICKNESS 1.6±0.06,
PATH THICKNESS 0.07,
PATH WIDTH 7.50±0.05 FOR LINES, PE, NEUTRAL

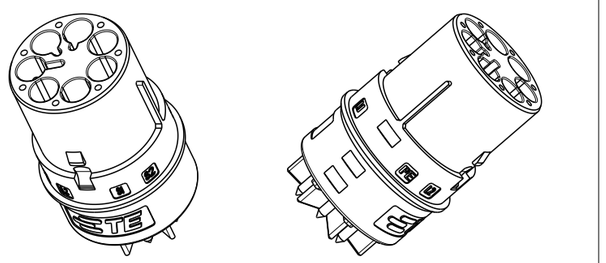

SCALE 1:1

THIS DRAWING IS A CONTROLLED DOCUMENT.

DIMENSIONS: mm

TOLERANCES UNLESS OTHERWISE SPECIFIED:
0 PLC ±-
1 PLC ±0.3
2 PLC ±0.20
3 PLC ±-
4 PLC ±-
ANGLES ±3°

MATERIAL -
FINISH -

DWN	A. BERNARDI	31MAR2011
CHK	M. ZUCCA	31MAR2011
APVD	G. TURCO	31MAR2011
PRODUCT SPEC	-	
APPLICATION SPEC	-	
WEIGHT	-	

TE Connectivity

NAME
PCB PIN CONNECTOR 6 POLES
M-LINE NECTOR
-

SIZE	CAGE CODE	DRAWING NO	RESTRICTED TO
A3	00779	C-293672	-

Customer Drawing | SCALE 2:1 | SHEET 1 OF 2 | REV A

THIS DRAWING IS UNPUBLISHED. RELEASED FOR PUBLICATION 2011
© COPYRIGHT 2011 BY - ALL RIGHTS RESERVED.

LOC	DIST
1	-

REVISIONS

P	LTR	DESCRIPTION	DATE	DWN	APVD
	-	SEE SHEET 1	-	-	-

POLARIZATION TYPES

POLARIZATION TYPE "C"	POLARIZATION TYPE "D"	POLARIZATION TYPE "E"
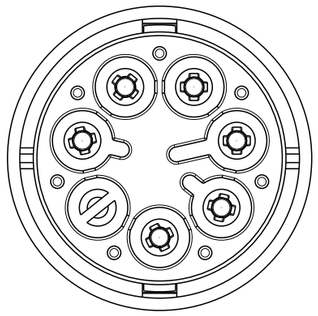	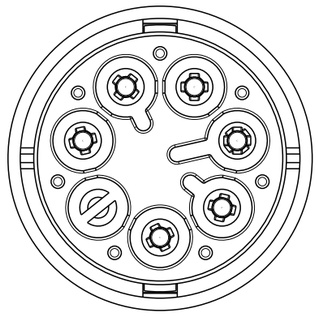	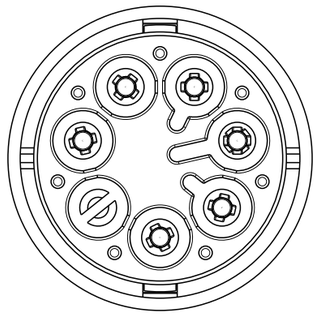
PNs 0-293672-3	PNs 0-293672-4	PNs 0-293672-5

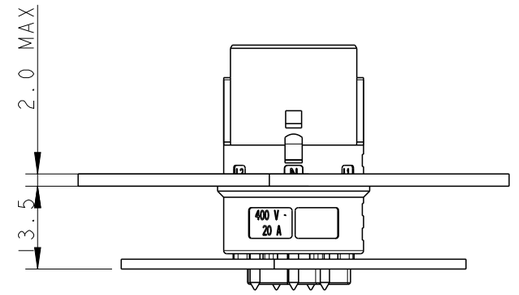

SCALE 1:1

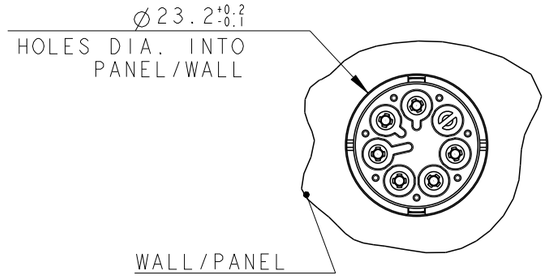

NOTE	POL. KEYING	COLOUR	DESCRIPTION	REV.	P/N
1	E	NATURAL	PIN PCB CONN 6 POLES NECTOR* M-LINE	A	0-293672-5
1	D	NATURAL	PIN PCB CONN 6 POLES NECTOR* M-LINE	A	0-293672-4
1	C	NATURAL	PIN PCB CONN 6 POLES NECTOR* M-LINE	A	0-293672-3

THIS DRAWING IS A CONTROLLED DOCUMENT.

DIMENSIONS: mm

TOLERANCES UNLESS OTHERWISE SPECIFIED:
0 PLC ±-
1 PLC ±0.3
2 PLC ±0.20
3 PLC ±-
4 PLC ±-
ANGLES ±3°

MATERIAL -
FINISH -

DWN A. BERNARDI 31MAR2011
CHK M. ZUCCA 31MAR2011
APVD G. TURCO 31MAR2011
PRODUCT SPEC -
APPLICATION SPEC -
WEIGHT -

TE Connectivity

NAME
PCB PIN CONNECTOR 6 POLES
M-LINE NECTOR
-

SIZE	CAGE CODE	DRAWING NO	RESTRICTED TO
A3	00779	C-293672	-

Customer Drawing | SCALE 2:1 | SHEET 2 OF 2 | REV A