

.082 +.003 −.002 X .040 DEEP KEYWAY

NOTE:
1. UNLESS OTHERWISE SPECIFIED ALL TOLERANCES TO BE ±.016.

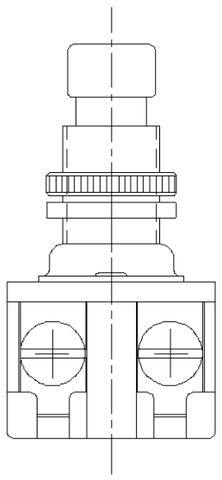

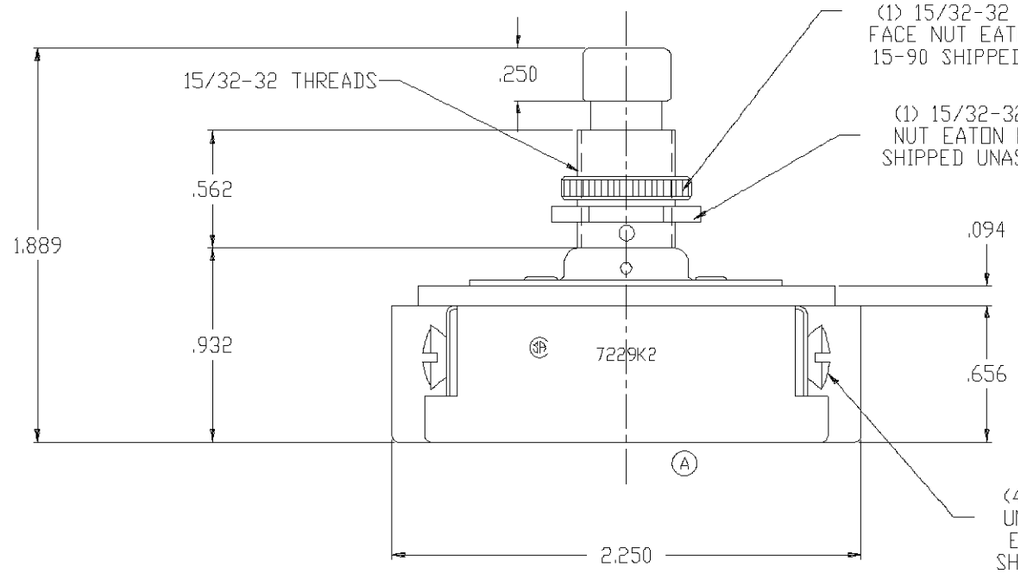

.421 +.002 −.001 DIA

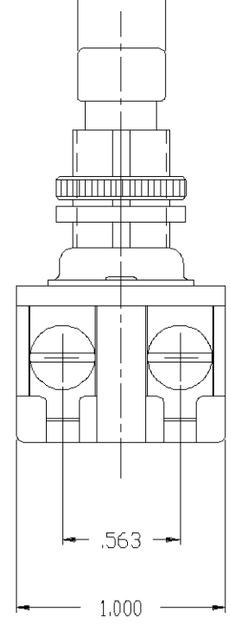

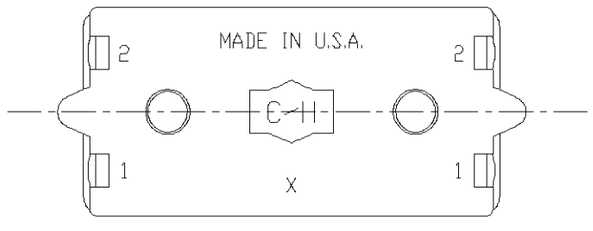

ORDER NO. 93719950

A	STAMPING: 7229K2 WAS NORM OPEN 7228K2; NOTE: "(4) 6-32 ... SHIPPED UNASSEMBLED" WAS "(4) 6-32 .... SHIPPED ASSEMBLED".	JF	WL	MRD	3/5/93	D		
		93719950						
B	NOTE: (4) 6-32 X .250 LONG ... 811-161 SHIPPED UNASSEMBLED WAS (4) 6-32 X .250 LONG ... 811-14 SHIPPED UNASSEMBLED.	JF	WL	NS	3/12/93	E		
		93719950						
C	REMOVED "ON" FROM TOP VIEW.	JF			4/27/94	F		
		93719950						

THIRD ANGLE PROJECTION

EATON

TITLE : D.P.D.T.PUSH BUTTON SWITCH				
DR. W. LEONARD	6/1/92	SURFACE COATING	FIRST ASSEM. WHERE LISTED 7229K2	
CHK. WESTEMEIER	6/1/92	SCALE	SUP'S ARROW HART 81951	
APP. MERLIN R. DUMMER	6/1/92	DO NOT SCALE DRAWING	SUP'D BY	

Property of Tyco Electronics Corporation March, 2001